Otter® Boat

Assembly Instructions...

1. Mount the keel to the Otter® Boat by inserting the two 1/4-20 bolts from the bottom through the keel and then the Otter® Boat. Then tightly secure the bolts with the washers and wing nuts from the top of the Otter® Boat.

Note: Mount the keel on the opposite side of the Otter® Boat from the tow line, with the weight pointed away from the tow line.

2. Tie a loop (off center) in the tow line with one end approximately 5 inches longer than three other end.
3. Mount the tow line to the Otter® Boat by threading it through the holes on the opposite side of the Otter® Boat from the keel. Tie a knot in each end of the tow line, so the loop is approximately 9 inches from the front hole and approximately 14 inches from the rear hole.

Note: You can fine tune the way your Otter® Boat tracks in the water by adjusting the length of either or both of the tow lines.

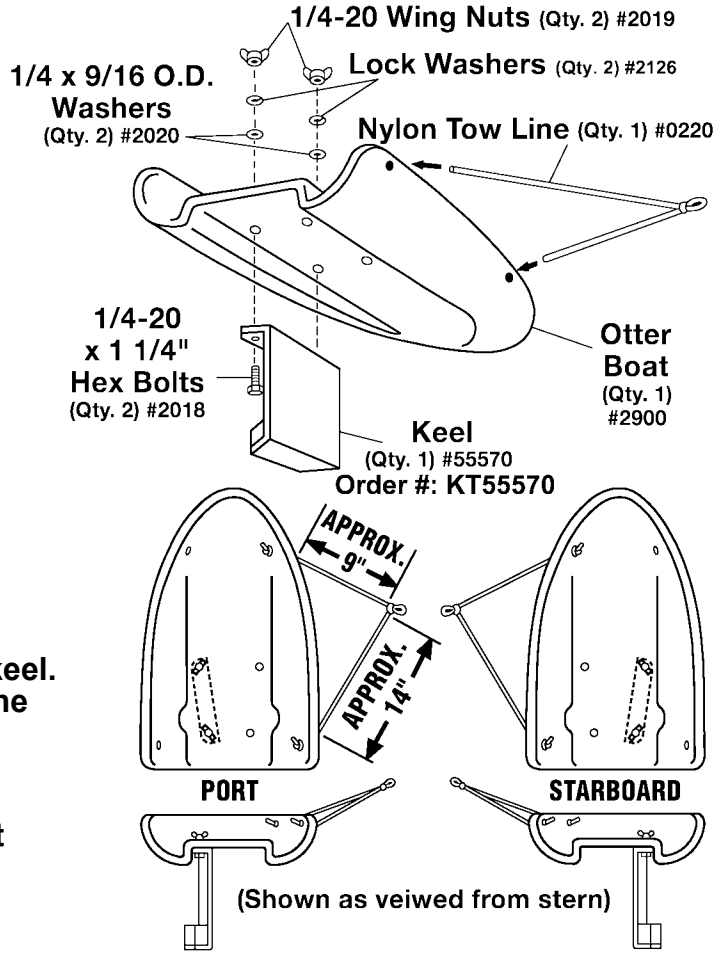

How To Modify Your Otter® Boat For Special Applications...

(For Pulling Copper Wire, Lead-Core, Heavy Lures And For Improved Performance At Slower Trolling Speeds.)

1. Contact Big Jon Sports® to purchase a "1/2 Keel" Part # KT55573.
2. Disassemble your Otter® Boat (except for the existing keel).
3. Insert a 1/4-20 bolt into the rear hole of your new 1/2 keel and the rear hole of the Otter® Boat. Make sure both keels are pointed away from the side of the Otter® Boat that the tow line is attached to.
4. Rotate the front of the 1/2 Keel it is parallel to the existing keel mark the front hole of the 1/2 keel on the bottom of the Otter® Boat.
5. Remove the 1/2 keel and drill a new hole using a 1/4 inch diameter drill bit.
6. Reassemble your Otter® Boat (except for the tow line).
7. On the side of the Otter® Boat that you removed the tow line from, mark the locations for two new holes, one inch below the existing tow line holes.
8. Drill two new holes, using a 3/16 inch diameter drill bit. Next, reinstall the tow line in the new holes.

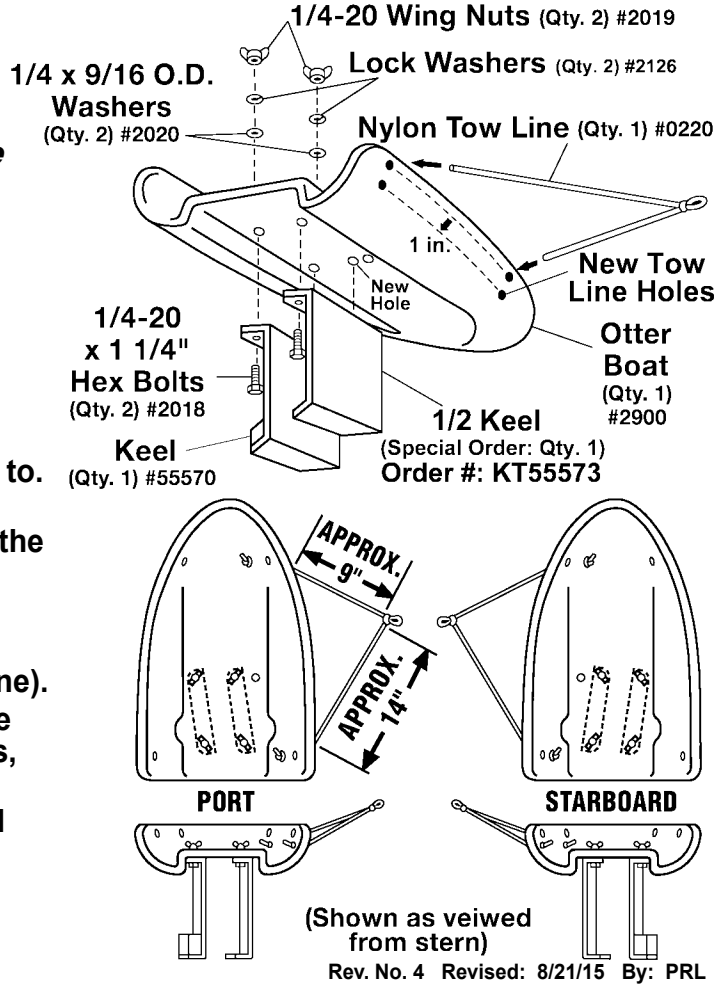

Big Jon Sports®
11455 US-31 South • Interlochen, MI 49643
(231) 275-1010 • emailus@bigjon.com • www.bigjon.com

Rev. No. 4 Revised: 8/21/15 By: PRL