CANNON

DIGI-TROLL IV ™

for use with "AH" serial numbers

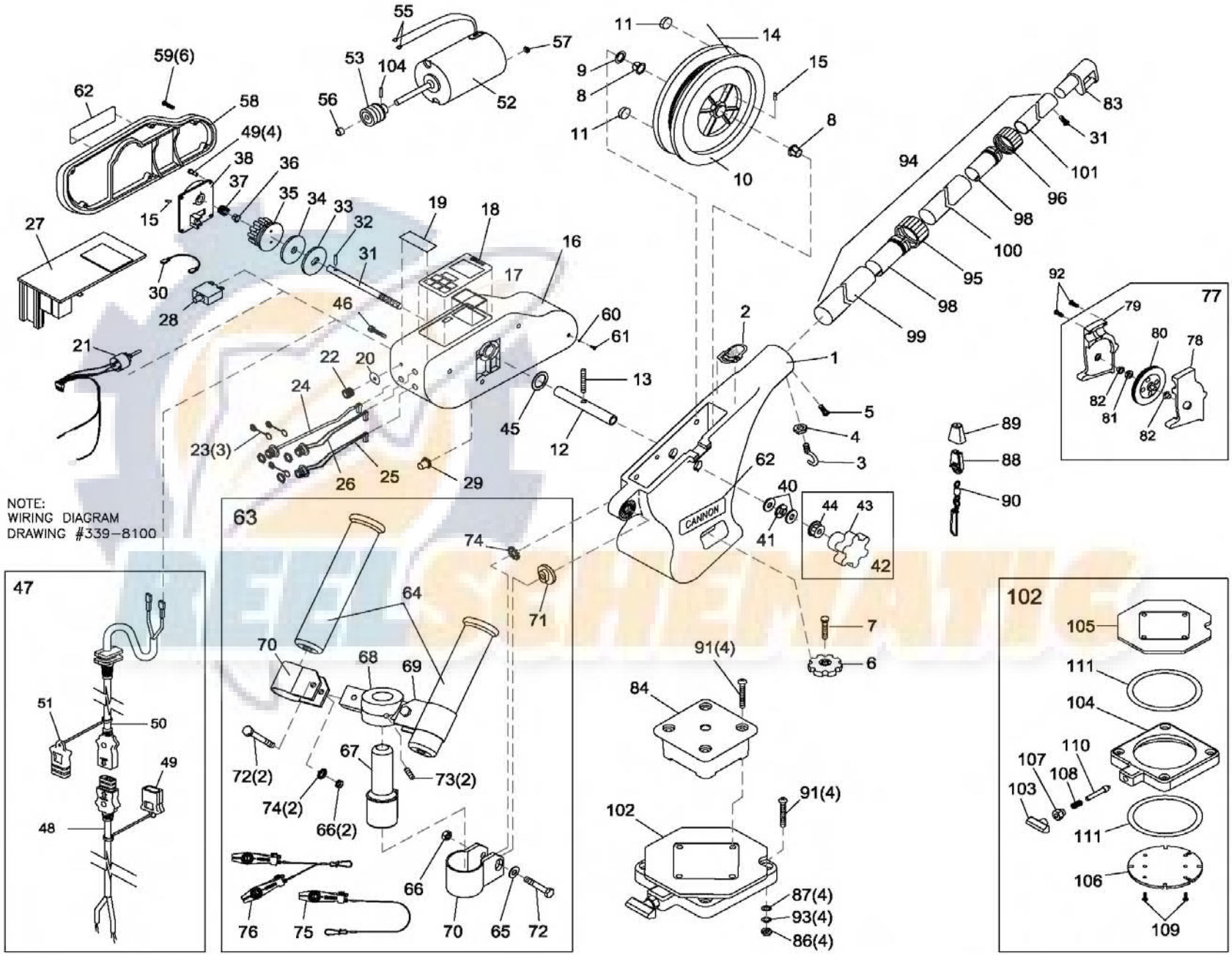

In the U.S.A., replacement parts may be ordered directly from CANNON Parts Dept., 121 Power Drive, Mankato, Minnesota 56001. In Canada, parts may be ordered from any of the Canadian Authorized Service Centers shown on the enclosed list. Be sure to provide the MODEL and SERIAL numbers of your downrigger when ordering parts. Please use the correct part numbers from the parts list. Payment for any parts ordered from the CANNON parts department, may be by cash, personal check, Discover Card, MasterCard or VISA. To order, call 1-800-227-6433 or FAX 1-800-527-4464.

1	3392500	FRAME - LARGE BLACK (LEXAN)
2	3395610	NOSE DECAL DTIV
3	9040040	HOOK - 1/4" - 20 ROLLED
4	2263102	NUT - HEX 1/4"-20
5	9280750	SCREW - 1/4" - 20 (RH) x 3/4" PPH
6	0849615	BASE LOCK KNOB
7	9040340	BOLT - 3/8"-16 X 1-1/2" HEX
8	9010001	BEARING - REEL SHAFT NYLINER [2.EA]
9	9430210	WASHER - 1-1/16" OD X 7/8" ID (NYLON)
10	0274731	REEL - MACHINED 3.75"
11	1459666	REEL MAGNET [2.EA]
12	1480071	SHAFT - REEL
13	9340131	SCREW - SET 5/16"-18 x 1-3/4" (REEL)
14	3775397	SPOOL CABLE (S/S) [400.FT]
15	9100070	CABLE LEADER SLEEVE [2.EA]
16	3396506	MOTOR HOUSING - DTIV (LEXAN)
17	1497071	LENSE - WINDOW DISPLAY
18	5564070	KEYPAD - DTIV
19	4427006	DECAL - POSITIVE ION CONTROL
20	4427007	DECAL - PIC KNOB DIAL
21	050215	POSITIVE ION CONTROL POT
22	611005	KNOB - POSITIVE ION CONTROL
23	700176	CAP - CONNECTION PORT [3.EA]
24	609145	CABLE ASSY - DTIV TRANSDUCER
25	609147	CABLE ASSY - DTIV SERIAL (DATA IN)
26	609148	CABLE ASSY - DTIV SERIAL (DATA OUT)
27	050217	CONTROL BOARD - DTIV
28	3398205	CIRCUIT BREAKER - 30 AMP
29	1221491	CIRCUIT BREAKER BOOT
30	1296831	WIRE - CIRCUIT BREAKER JUMPER (RED)
31	1480070	SHAFT - DRIVE
32	9250002	PIN - DRIVE SHAFT 3/16" ROLL SS
33	0467695	BRAKE PLATE - REEL
34	1264670	CLUTCH PAD
35	1433074	GEAR - DRIVER WORM
36	9010003	BEARING - DRIVE SHAFT NYLINER
37	9400005	SPRING - SHAFT CONTACT
38	4421002	COVER - GEAR CASE
39	2372100	SCREW - #8 x 5/8" PPHMS [5.EA]
40	9010310	WASHER - THRUST [2.EA]
41	9010280	BEARING - THRUST
42	2998906	KNOB BRAKE
43	0649001	►KNOB - HAND ADJUST
44	9130390	►NUT - KNURLED INSERT 3/8"-24
45	1479070	O-RING - REEL SHAFT
46	9370205	SCREW - 1/4" x 3/4" HEX WASH HD [3.EA]
47	3993200	POWER CABLE ASSEMBLY
48	3393200	>POWER CABLE - BATTERY
49	3393201	>CAP - POWER CABLE - BATTERY
50	3393202	>POWER CABLE - MOTOR
51	3393210	>CAP - POWER CABLE -MOTOR
52	1458001	MOTOR 12V DC
53	1497070	GEAR - WORM MOTOR
54	9250001	PIN - MOTOR, 3/32" X 3/4" ROLL SS
55	700032	TERMINAL - MOTOR, FEM 12-10 [2.EA]
56	9010002	BEARING - MOTOR SHAFT
57	2263112	NUT - HEX #10-32 BZ
58	1421072	COVER - MOTOR HOUSING (LEXAN)
59	3393400	SCREW - #8-18 x 1-1/4" PPHSMS SS [6.EA]
60	701007	O-RING - SMALL
61	2332103	SCREW-#6-20 X 3/8"
62	3395630	DECAL - CANNON LARGE [2.EA]
63	3991902	BAG ASSY - DUAL REAR ROD HOLDER
64	0290796	>TUBE - ROD HOLDER [2.EA]
65	2151726	>WASHER - 5/16" FLAT
66	2383106	>NUT - 5/16"-18 SS [3.EA]
67	2411386	>POST - REAR MOUNT (LEXAN)
68	2411390	>BRACKET - DUAL ROD (LEXAN)
69	2419470	>CLAMP - ROD HOLDER [2.EA]
70	3319005	>CLAMP - ROD HOLDER w/ SLOT
71	3325002	>DISK - ROD HOLDER
72	9040310	>BOLT - HEX 5/16"-18 x 2" [3.EA]
73	9340101	>SCREW - SET 3/8"-16 x 5/8" [2.EA]
74	9430160	>WASHER - STAR 5/16" [3.EA]
75	2277002	>UNIVERSAL LINE RELEASE
76	3998600	>UNI-STACKER RELEASE
77	399-2300	SWIVEL HEAD ASSEMBLY
78	0267001	►SIDE PLATE (RH)
79	0267002	►SIDE PLATE (LH)
80	0269726	►PULLY - SWIVEL HEAD
81	3397300	►WASHER - .735 OD X .36 ID
82	9010070	►HDW BEARING BRASS[2.EA]
83	2227820	BOOM END - TELESCOPIC (LEXAN)
84	1007334	MOUNTING BASE (LEXAN)
85	2994893	*BAG ASSEMBLY, MOUNTING (KIT #3)
86	2263102	NUT - HEX 1/4"-20 [4.EA]
87	2371712	WASHER - 9/32" FLAT [4.EA]
88	9100100	TERMINATOR
89	9100101	TERMINATOR CUSHION
90	9100620	TERMINATOR SNAP & SWIVEL
91	9280725	BOLT - TRUSS 1/4" - 20 x 2-1/2" [8.EA]
92	9370010	SCREW - #4 x 1/2" PPH [3.EA]
93	9950357	WASHER - LOCK 1/4" SPLIT [4.EA]
94	2210821	TELESCOPIC BOOM
95	2219822	>BASE TUBE CLAMP
96	2219823	>MID TUBE CLAMP
97	2222825	>MID TUBE COLLET
98	2222826	>BASE TUBE COLLET
99	2290828	►BOOM BASE TUBE (BLACK)
100	2290829	►BOOM MID TUBE (BLACK)
101	2290830	►BOOM END TUBE (BLACK)
102	2998905	SWIVEL BASE
103	2249001	>KNOB - RELEASE PIN (LEXAN)
104	2267001	>BASE PLATE (LEXAN)
105	2267002	>SWIVEL PLATE (LEXAN)
106	2267006	>INDEXING PLATE (TAPPED)
107	2277001	>NUT - RETAINER RELEASE
108	2287002	>SPRING - RELEASE PIN
109	2372100	>SCREW - #8 x 5/8" PPHMS [2.EA]
110	3392600	>RELEASE PIN
111	9010004	>BEARING - SWIVEL BASE [2.EA]

> PART OF ASSEMBLY

►ITEM CANNOT BE SOLD SEPARATELY

* PARTS USED BUT NOT SHOWN

PART NO: 339-8100

REVISIONS					
REV.	ECN NO.	DESCRIPTION	BY	DATE	APP'VD BY
A	15412	RELEASED	JLL	10/18/06	DJ

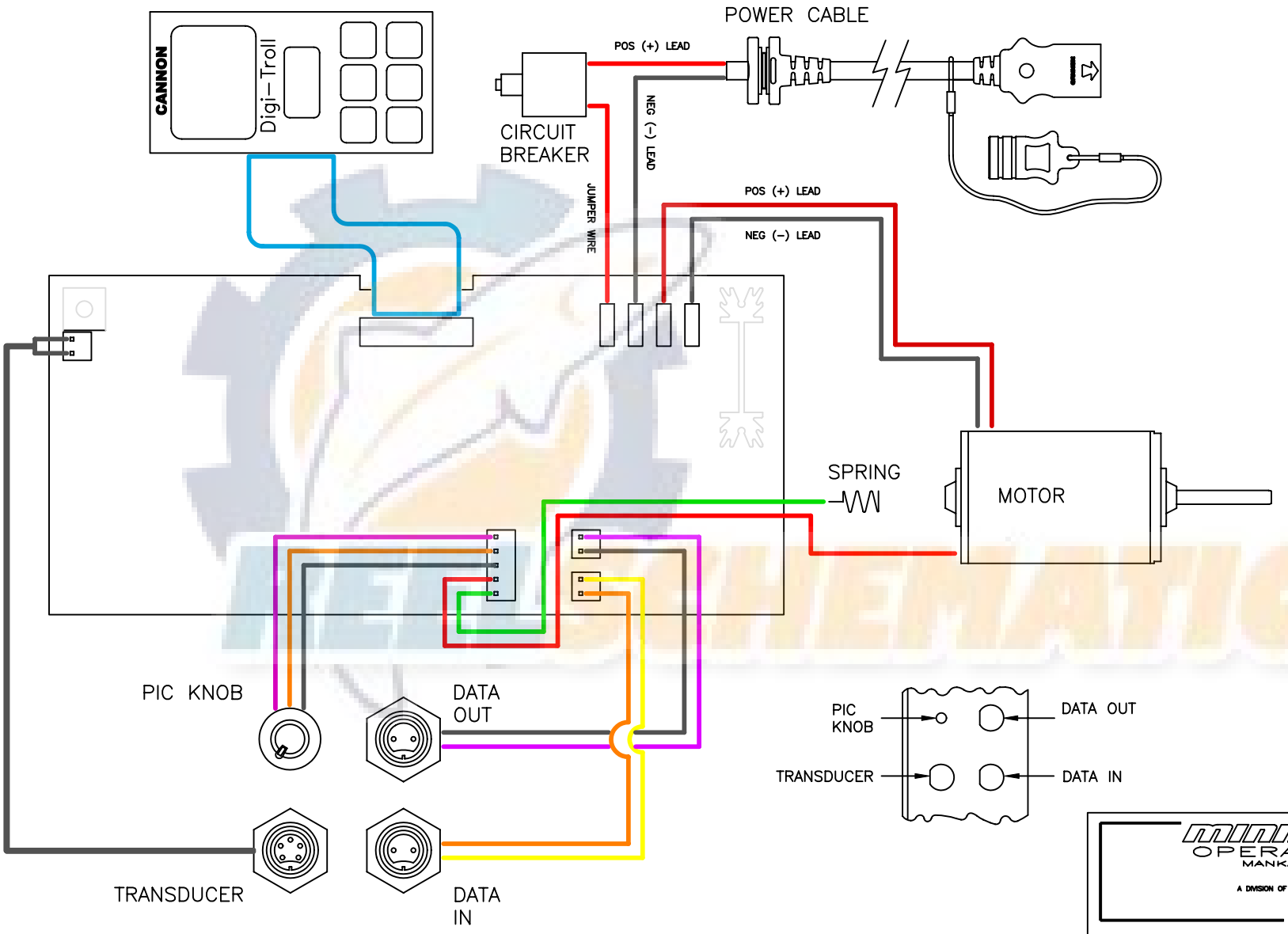

MINN KOTA OPERATIONS
MANKATO, MN
A DIVISION OF JOHNSON OUTDOORS

FINISH: NONE	PART NAME: DT4 WIRING DIAGRAM		A SIZE
MATERIAL: NONE	RELEASED ECN#: 15412	PART NO.: 339-8100	REV.: A
	SCALE: NONE	SHEET 1 OF 1	U/M: IN.

TOLERANCES:
UNLESS OTHERWISE SPECIFIED
.XXXX ±.0010
.XXX ±.005
.XX ±.010
.X ±.015
FRACTIONAL ± 1/64
ANGULAR DIMENSIONS ± 0°30'

CONFIDENTIAL PROPERTY-
This document is the confidential property of Johnson Outdoors and is loaned subject to return upon demand; title to same is never sold/transferred for any reason. This document is to be used only pursuant to written instructions of Johnson Outdoors All rights to designs and inventions are reserved by Johnson Outdoors. Possession of this document is accepted subject to the foregoing.

THIRD ANGLE PROJECTION

DRAWN BY: JLL	DATE: 10/18/06	
APP'VD BY: DJ	DATE: 10/18/06	
CHECKED BY:	DATE:	