CANNON

MAG 10 TS/E ™

for use with "AH" serial numbers

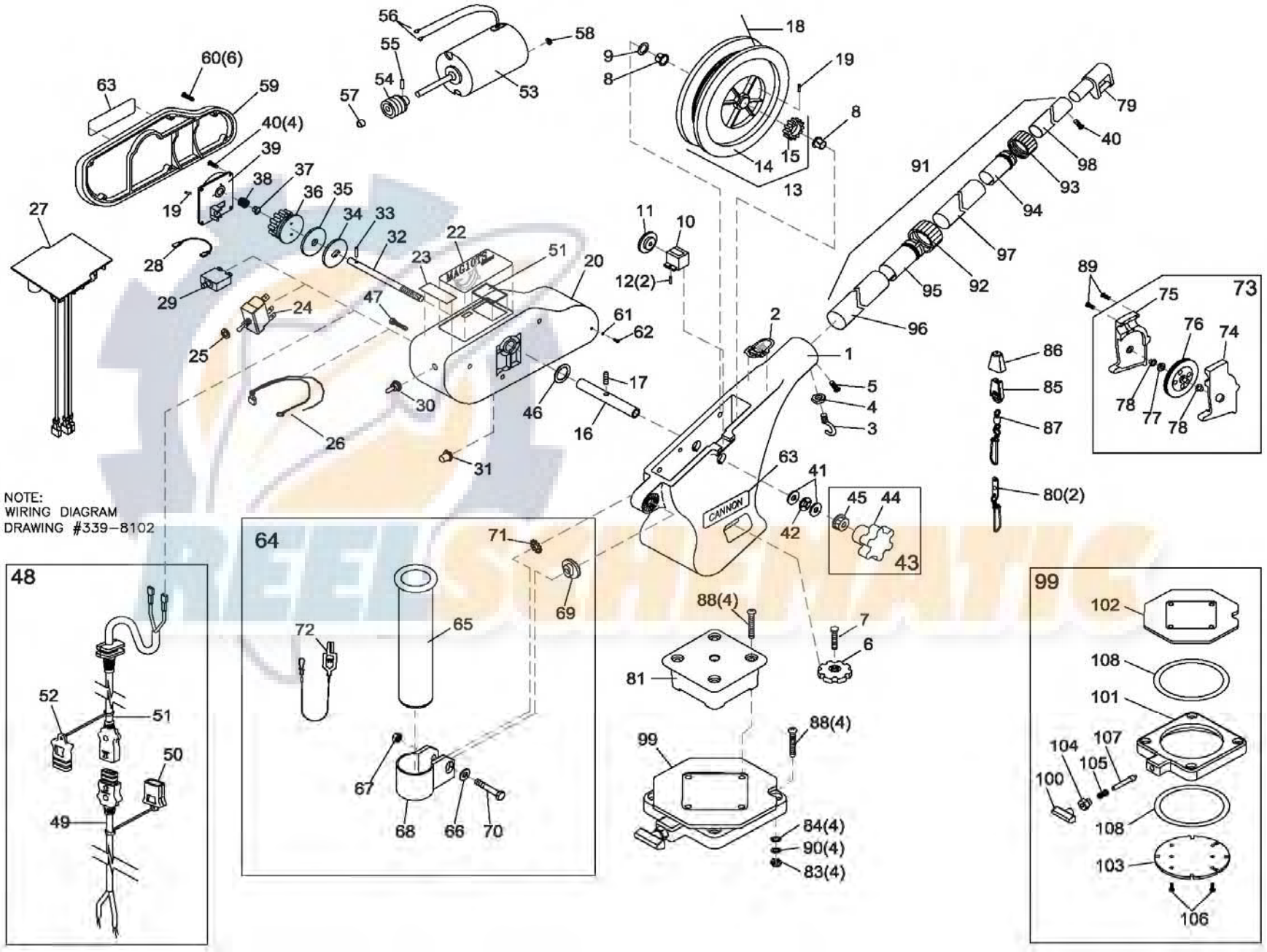

1	3392505	FRAME - LARGE WHITE (LEXAN)
2	4427005	NOSE DECAL MAGNUM
3	9040040	HOOK - 1/4" - 20 ROLLED
4	2263102	NUT - HEX 1/4"-20
5	9280750	SCREW - 1/4" - 20 (RH) x 3/4" PPH
6	0849615	BASE LOCK KNOB
7	9040340	BOLT - 3/8"-16 X 1-1/2" HEX
8	9010001	BEARING - REEL SHAFT NYLINER [2.EA]
9	9430210	WASHER - 1-1/16" OD X 7/8" ID (NYLON)
10	3320011	DEPTH COUNTER - 3 DIGIT (METRIC)
11	3333010	COUNTER GEAR (METRIC)
12	0854654	COUNTER CUSHION/STOPPER [2.EA]
13	3397916	REEL ASSEMBLY - TS ELECTRIC (METRIC)
14	3397902	►REEL - 3.75" SS
15	3333011	>GEAR REEL (METRIC)
16	1480071	SHAFT - REEL
17	9340131	SCREW - SET 5/16"-18 x 1-3/4" (REEL)
18	3775397	SPOOL CABLE SS [400.FT]
19	9100070	CABLE LEADER SLEEVE [2.EA]
20	3396554	MOTOR HOUSING - MAG 10 TS (LEXAN)
21	1497071	LENSE - WINDOW DISPLAY
22	3395609	DECAL - LARGE, MAG 10 TS
23	3395700	DECAL - POSITIVE ION CONTROL TS
24	2286792	SWITCH - UP/DN CONTROL
25	2286793	WASHER - SHIM .750 x .1 UP/DN SWITCH
26	050176	CABLE ASSY - MAG 10 (SHORT STOP)
27	050175	CONTROL BOARD - MAG 10
28	1296831	WIRE - CIRCUIT BREAKER JUMPER (RED)
29	3398205	CIRCUIT BREAKER - 30 AMP
30	1221490	UP/DN SWITCH BOOT
31	1221491	CIRCUIT BREAKER BOOT
32	1480070	SHAFT - DRIVE
33	9250002	PIN - DRIVE SHAFT 3/16" ROLL SS
34	0467695	BRAKE PLATE - REEL
35	1264670	CLUTCH PAD
36	1433074	GEAR - DRIVER WORM
37	9010003	BEARING - DRIVE SHAFT NYLINER
38	9400005	SPRING - SHAFT CONTACT
39	4421002	COVER - GEAR CASE
40	2372100	SCREW - #8 x 5/8" PPHMS [5.EA]
41	9010310	WASHER - THRUST [2.EA]
42	9010280	BEARING - THRUST
43	2998906	KNOB BRAKE
44	0649001	►KNOB - HAND ADJUST
45	9130390	►NUT - KNURLED INSERT 3/8"-24
46	1479070	O-RING - REEL SHAFT
47	9370205	SCREW - 1/4" x 3/4" HEX WASH HD [3.EA]
48	3993200	POWER CABLE ASSEMBLY
49	3393200	>POWER CABLE - BATTERY
50	3393201	>CAP - POWER CABLE - BATTERY
51	3393202	>POWER CABLE - MOTOR
52	3393210	>CAP - POWER CABLE -MOTOR
53	1458001	MOTOR 12V DC
54	1497070	GEAR - WORM MOTOR
55	9250001	PIN - MOTOR, 3/32" X 3/4" ROLL SS
56	700032	TERMINAL - MOTOR, FEM 12-10 [2.EA]
57	9010002	BEARING - MOTOR SHAFT
58	2263112	NUT - HEX #10-32 BZ
59	3390201	COVER - MOTOR HOUSING TS (LEXAN)
60	3393400	SCREW - #8-18 x 1-1/4" PPHSMS SS [6.EA]
61	701007	O-RING - SMALL
62	2332103	SCREW-#6-20 X 3/8"
63	3395632	DECAL - CANNON LARGE TS [2.EA]
64	3991903	BAG ASSY - REAR ROD HOLDER TS
65	0290796	>TUBE - ROD HOLDER
66	2151726	>WASHER - 5/16" FLAT
67	2383106	>NUT - 5/16"-18 SS
68	3319005	>CLAMP - ROD HOLDER w/ SLOT
69	3325002	>DISK - ROD HOLDER
70	9040310	>BOLT - HEX 5/16"-18 x 2"
71	9430160	>WASHER - STAR 5/16"
72	2200109	>OFFSHORE SALTWATER RELEASE
73	3992300	SWIVEL HEAD ASSEMBLY
74	0267001	►SIDE PLATE (RH)
75	0267002	►SIDE PLATE (LH)
76	0269726	►PULLY - SWIVEL HEAD
77	3397300	►WASHER - .735 OD X .36 ID
78	9010070	►HDW BEARING BRASS[2.EA]
79	2227820	BOOM END - TELESCOPIC (LEXAN)
80	2200148	SNAP & INSULATOR [2.EA]
81	1007334	MOUNTING BASE (LEXAN)
82	2994893	*BAG ASSEMBLY, MOUNTING (KIT #3)
83	2263102	NUT - HEX 1/4"-20 [4.EA]
84	2371712	WASHER - 9/32" FLAT [4.EA]
85	9100100	TERMINATOR
86	9100101	TERMINATOR CUSHION
87	9100620	TERMINATOR SNAP & SWIVEL
88	9280725	BOLT - TRUSS 1/4" - 20 x 2-1/2" [8.EA]
89	9370010	SCREW - #4 x 1/2" PPH [3.EA]
90	9950357	WASHER - LOCK 1/4" SPLIT [4.EA]
91	3392010	TELESCOPIC BOOM SS
92	2219822	>BASE TUBE CLAMP
93	2219823	>MID TUBE CLAMP
94	2222825	>MID TUBE COLLET
95	2222826	>BASE TUBE COLLET
96	3392001	►BOOM BASE TUBE (SS)
97	3392002	►BOOM MID TUBE (SS)
98	3392003	►BOOM END TUBE (SS)
99	2998905	SWIVEL BASE
100	2249001	>KNOB - RELEASE PIN (LEXAN)
101	2267001	>BASE PLATE (LEXAN)
102	2267002	>SWIVEL PLATE (LEXAN)
103	2267006	>INDEXING PLATE (TAPPED)
104	2277001	>NUT - RETAINER RELEASE
105	2287002	>SPRING - RELEASE PIN
106	2372100	>SCREW - #8 x 5/8" PPHMS [2.EA]
107	3392600	>RELEASE PIN
108	9010004	>BEARING - SWIVEL BASE [2.EA]

> PART OF ASSEMBLY

►ITEM CANNOT BE SOLD SEPARATELY

* PARTS USED BUT NOT SHOWN

PART NO: 339-8102

REVISIONS					
REV.	ECN NO.	DESCRIPTION	BY	DATE	APP'VD BY
A	15412	RELEASED	JLL	10/18/06	DJ

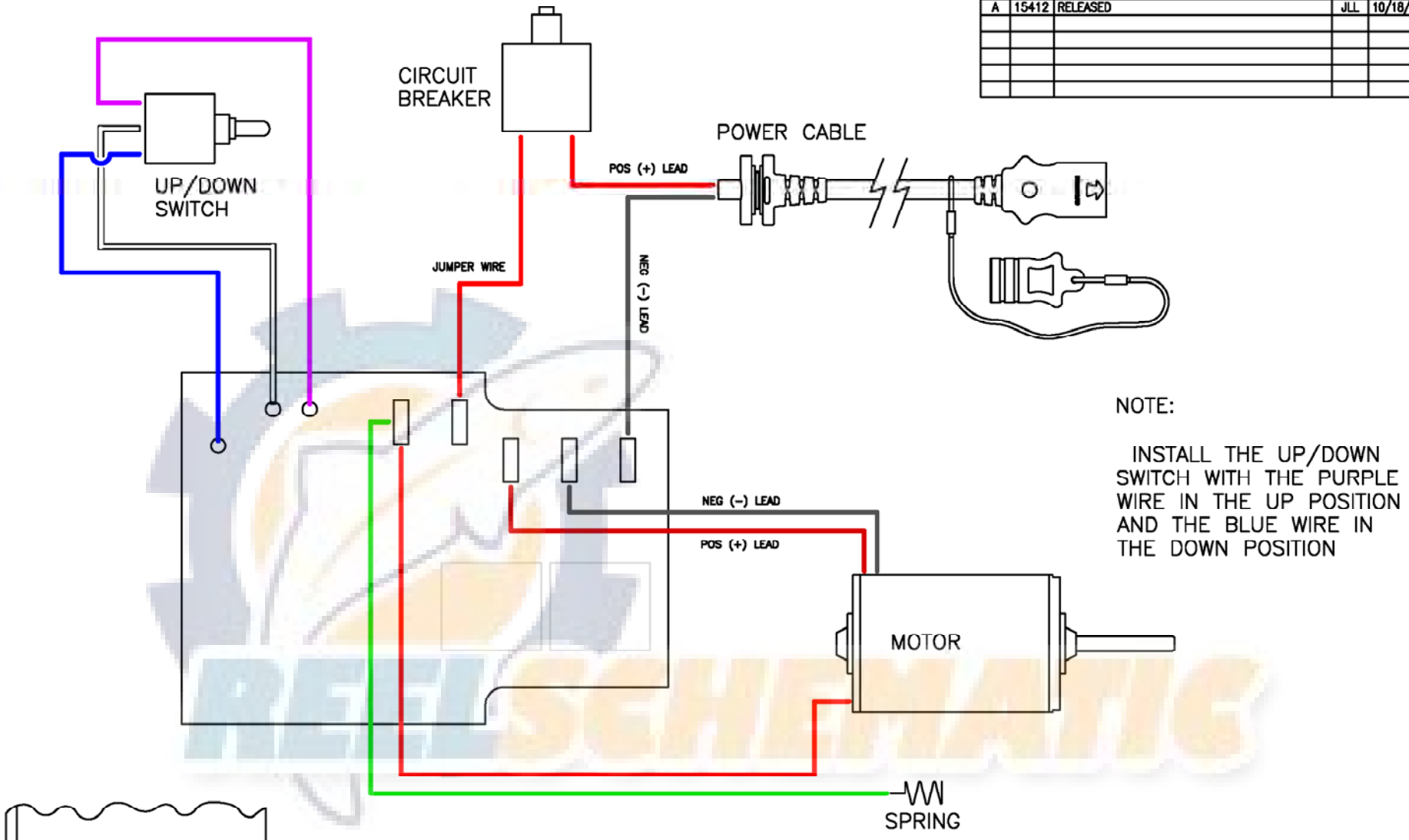

NOTE:

INSTALL THE UP/DOWN SWITCH WITH THE PURPLE WIRE IN THE UP POSITION AND THE BLUE WIRE IN THE DOWN POSITION

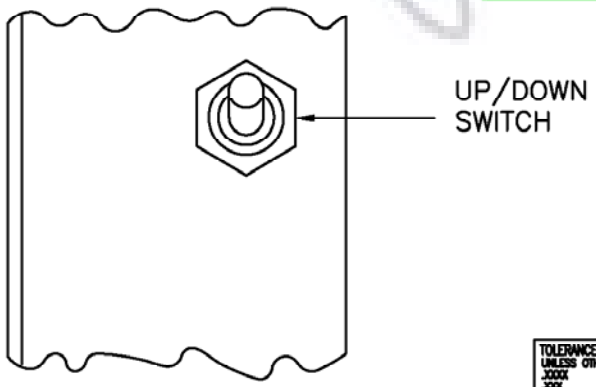

REEL SCHEMATIC

MINN KOTA OPERATIONS
MANKATO, MN
A DIVISION OF JOHNSON OUTDOORS

TOLERANCES:
UNLESS OTHERWISE SPECIFIED
.XXXX ±.0010
.XXX ±.005
.XX ±.010
.X ±.015
FRACTIONAL ± 1/64
ANGULAR DIMENSIONS ± 0°30'

CONFIDENTIAL PROPERTY-
This document is the confidential property of Johnson Outdoors and is loaned subject to return upon demand; title to same is never sold/transferred
for any reason. This document is to be used only pursuant to written instructions of Johnson Outdoors. All rights to designs and inventions are reserved by Johnson Outdoors. Possession of this document is accepted subject to the foregoing.

THIRD ANGLE PROJECTION

DRAWN BY: JLL	DATE: 10/18/06	
APP'VD BY: DJ	DATE: 10/18/06	
CHECKED BY:	DATE:	

FINISH: NONE	PART NAME: MAG 10 & 5 WIRING DIAGRAM		A SIZE
MATERIAL: NONE	RELEASED ECN#: 15412	PART NO.: 339-8102	REV.: A
	SCALE: NONE	SHEET 1 OF 1	U/M: IN.