Mag 15 Parts List

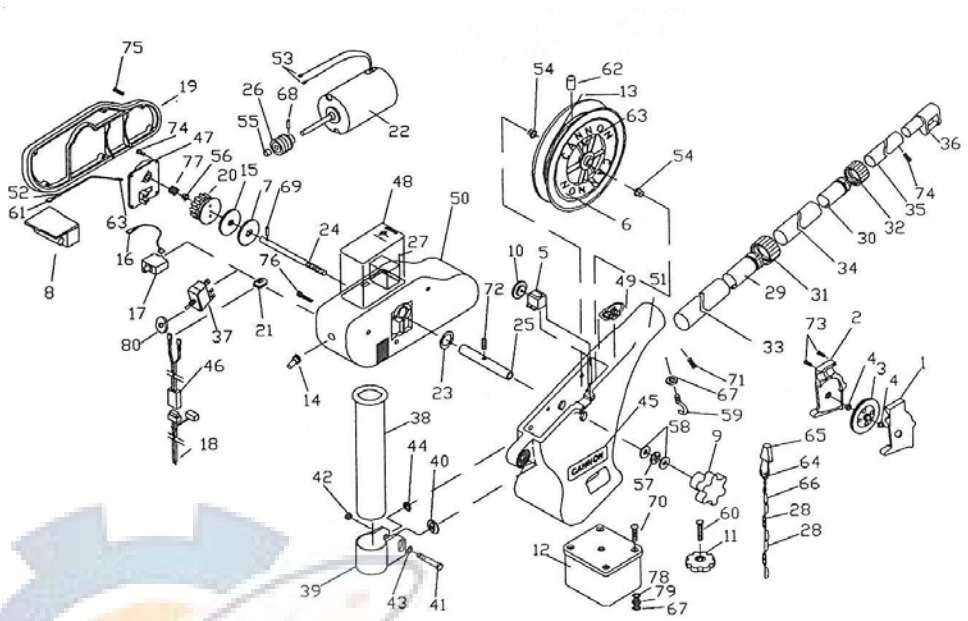

Item	Description	Part number
EXP	Swivel Head Assy	0200135
1	Plate side Right	0267001
2	Plate side Left	0267002
3	Pulley Swivel Hd	0269726
4	Bearing Brass	9010070 (2)
5	Meter 3 Digit	0220477
6	Reel 7 ½″	0274000
7	Reel Plate Clutch	0467895
8	PCB Mag	050175
9	Knob Break adj.	1249916
10	Gear Counter	0833561
11	Knob Base Lock	0849615
12	Mounting Base	1007334
13	Wire .034 Camo	1015391 (400)
14	Boot Switch	1221490
15	Clutch Pad sm Hole	1264670
16	Breaker Jumper	1296831
17	Circuit Break. 18a	1421070
18	Cable Battery	1415072
19	Motor Cover	1421070
20	Gear & Driver Worm	1433074
21	Grommet Power Cord	1435070
22	Motor 12V	1458001
23	O-Ring Cannon	1479070

24	Shaft Drive	1480070
25	Shaft Reel	1480071
26	Worm	1497070
27	Lens Window	1497074
28	Snap & Insulator	2200148
EXP	Boom Telescopic	2210821
29	Clamp Base Tube	2222824
30	Clamp Inter tube	2222825
31	Collet Base	2219822
32	Collet Inter	2219823
33	Boom Base	2290828
34	Boom Inter	2290829
35	Boom End Tube	2290830
36	Boom End Telesc.	2227820
37	Switch Shortstop	2286792
38	Tube Rod Holder	0290796
39	Clamp Rod Holder	3319005
40	O-Bround Disc	3325002
41	Bolt 5/16-18 x 2	9040310
42	Nut 5/16-18 hex	9130190
43	Washer 5/16 flat	9430101
44	Washer 5/16 int/ext	9430160
45	Emblem 1x4 lg	3327003
46	Power Cable	4415004
47	Gear Case Cover	4421002
48	Emblem Mag 15	4424001
49	Nose Emblem	4427005
50	Hsg Mag 20	4443199
51	Frame Large	5530030
52	Wire ShortStop “Y”	050176
53	Nsul Fem 12-10	700032 (2)
54	Nyliner Keyed	9010001 (2)
55	Bearing	9010002
56	Drive Nyliner	9010003
57	Torque Trans	9010280
58	Bearing Race Torq	9010310 (2)
59	Bolt ¼-20 Hook	9040040
60	Bolt 3/8-16 x 1 ½	9040340
61	Con ¼ Fem Ins	
62	Spring Cable con.	9400003
63	Leader Sleeve	9100070 (2)
64	Terminator	9100100
65	Cushion Terminator	9100101
66	Snap Swivel	9100620
67	Nut ¼-20	9130100 (5)
68	Pin 3/32x3/4 roll	9250001
69	Pin 3/16x1 roll	9250002

70	Screw ¼-20X2 ½	9280725 (8)
71	Screw ¼-20x3/4	9280750
72	Set 5/16-18x1 ¾	9340131
73	Screw #4x ½	9370010 (6)
74	Screw #8x5/8	9370070 (7)
75	Screw #8x7/8	9370100 (6)
76	SCR 1/4x3/4 wsh hd	9370205 (3)
77	Spring Shortstop	9400005
78	Washer ¼ Flat	9430040 (4)
79	Washer ¼ Split	9430070 (4)
80	Shim .750x.125	2286793
81	Nut	602012

REELSCHEMATIC