CANNON

MAG 20 DT/HS™

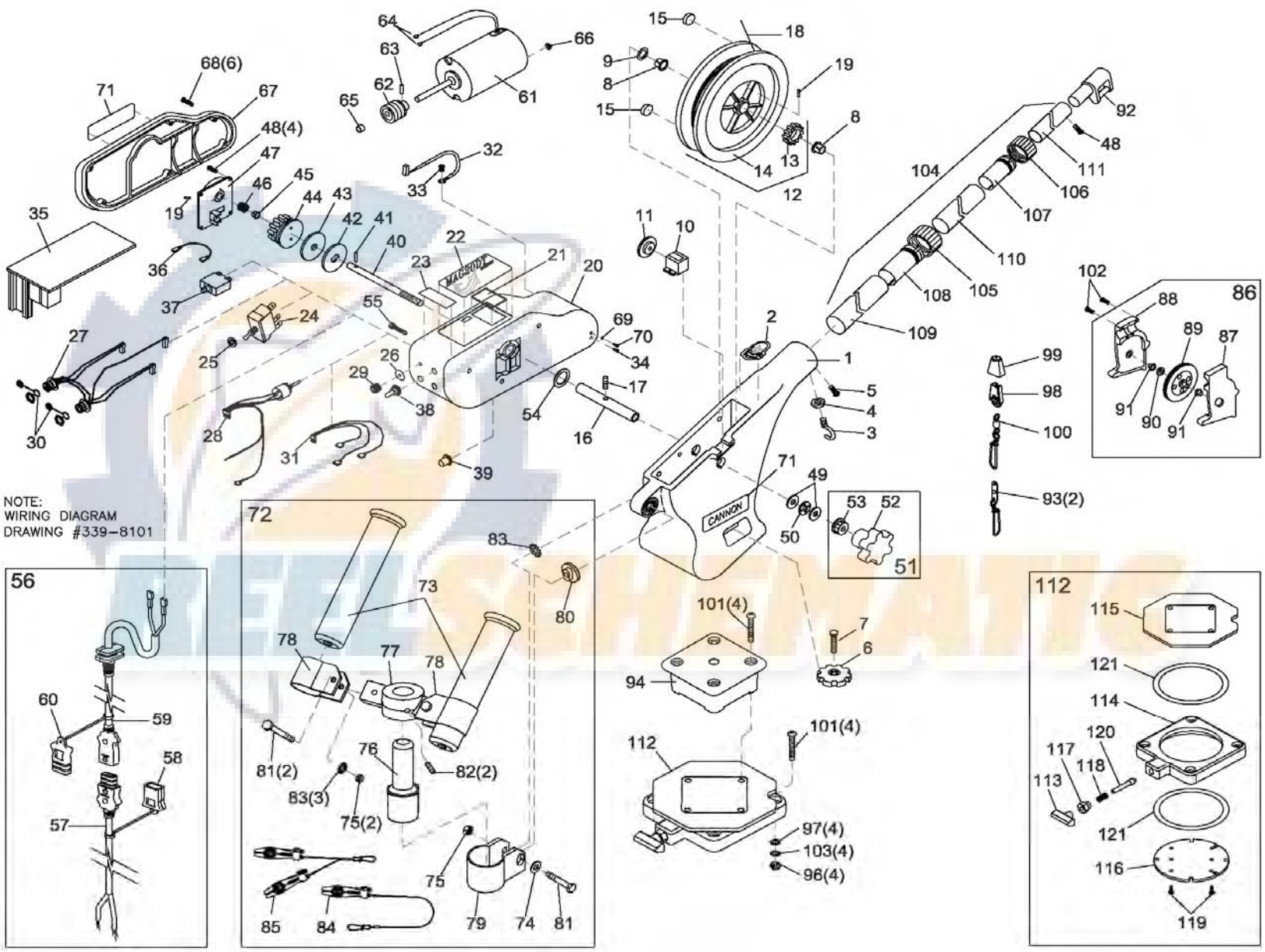

In the U.S.A., replacement parts may be ordered directly from CANNON Parts Dept., 121 Power Drive, Mankato, Minnesota 56001. In Canada, parts may be ordered from any of the Canadian Authorized Service Centers shown on the enclosed list. Be sure to provide the MODEL and SERIAL numbers of your downrigger when ordering parts. Please use the correct part numbers from the parts list. Payment for any parts ordered from the CANNON parts department, may be by cash, personal check, Discover Card, MasterCard or VISA. To order, call 1-800-227-6433 or FAX 1-800-527-4464.

1	3392500	FRAME - LARGE BLACK (LEXAN)
2	4427005	NOSE DECAL MAGNUM
3	9040040	HOOK - 1/4" - 20 ROLLED
4	2263102	NUT - HEX 1/4"-20
5	9280750	SCREW - 1/4" - 20 (RH) x 3/4" PPH
6	0849615	BASE LOCK KNOB
7	9040340	BOLT - 3/8"-16 X 1-1/2" HEX
8	9010001	BEARING - REEL SHAFT NYLINER [2.EA]
9	9430210	WASHER - 1-1/16" OD X 7/8" ID (NYLON)
10	0220477	DEPTH COUNTER - 3 DIGIT
11	0833561	GEAR - COUNTER
12	0274000	REEL ASSEMBLY - HS ELECTRIC
13	0233560	>GEAR REEL
14	0274731	►REEL - MACHINED 3.75"
15	1459666	REEL MAGNET [2.EA]
16	1480071	SHAFT - REEL
17	9340131	SCREW - SET 5/16"-18 x 1-3/4" (REEL)
18	3775397	SPOOL CABLE SS [400.FT]
19	9100070	CABLE LEADER SLEEVE [2.EA]
20	3396530	MOTOR HOUSING - MAG 20 (LEXAN)
21	1497071	LENSE - WINDOW DISPLAY
22	3395620	DECAL - LARGE, MAG 20 DT/HS
23	3395702	DECAL - POSITIVE ION CONTROL
24	2286792	SWITCH - UP/DN CONTROL
25	2286793	WASHER - SHIM .750 x .1 UP/DN SWITCH
26	3395703	DECAL - PIC KNOB DIAL
27	050268	CABLE ASSY - MAG20DT (DATA IN/OUT)
28	050215	POSITIVE ION CONTROL POT
29	611005	KNOB - POSITIVE ION CONTROL
30	700176	CAP - CONNECTION PORT [2.EA]
31	609209	CABLE ASSY - MAG20DT UP/DN SWITCH
32	609253	CABLE ASSY - ANTENNA IN (SENSOR)
33	1234002	INSERT - 1/4" PRESS THD #6-32
34	603103	SCREW - MACH #6-32 x 3/8" SS
35	050265	CONTROL BOARD - MAG 20 DT
36	1296831	WIRE - CIRCUIT BREAKER JUMPER (RED)
37	3398205	CIRCUIT BREAKER - 30 AMP
38	1221490	UP/DN SWITCH BOOT
39	1221491	CIRCUIT BREAKER BOOT
40	1480070	SHAFT - DRIVE
41	9250002	PIN - DRIVE SHAFT 3/16" ROLL SS
42	0467695	BRAKE PLATE - REEL
43	1264670	CLUTCH PAD
44	1433074	GEAR - DRIVER WORM
45	9010003	BEARING - DRIVE SHAFT NYLINER
46	9400005	SPRING - SHAFT CONTACT
47	4421002	COVER - GEAR CASE
48	2372100	SCREW - #8 x 5/8" PPHMS [5.EA]
49	9010310	WASHER - THRUST [2.EA]
50	9010280	BEARING - THRUST
51	2998906	KNOB BRAKE
52	0649001	►KNOB - HAND ADJUST
53	9130390	►NUT - KNURLED INSERT 3/8"-24
54	1479070	O-RING - REEL SHAFT
55	9370205	SCREW - 1/4" x 3/4" HEX WASH HD [3.EA]
56	3993200	POWER CABLE ASSEMBLY
57	3393200	>POWER CABLE - BATTERY
58	3393201	>CAP - POWER CABLE - BATTERY
59	3393202	>POWER CABLE - MOTOR
60	3393210	>CAP - POWER CABLE -MOTOR
61	1458001	MOTOR 12V DC
62	1497070	GEAR - WORM MOTOR
63	9250001	PIN - MOTOR, 3/32" X 3/4" ROLL SS
64	700032	TERMINAL - MOTOR, FEM 12-10 [2.EA]
65	9010002	BEARING - MOTOR SHAFT
66	2263112	NUT - HEX #10-32 BZ
67	1421072	COVER - MOTOR HOUSING (LEXAN)
68	3393400	SCREW - #8-18 x 1-1/4" PPHSMS SS [6.EA]
69	701007	O-RING - SMALL
70	2332103	SCREW-#6-20 X 3/8"
71	3395630	DECAL - CANNON LARGE [2.EA]
72	3991902	BAG ASSY - DUAL REAR ROD HOLDER
73	0290796	>TUBE - ROD HOLDER [2.EA]
74	2151726	>WASHER - 5/16" FLAT
75	2383106	>NUT - 5/16"-18 SS [3.EA]
76	2411386	>POST - REAR MOUNT (LEXAN)
77	2411390	>BRACKET - DUAL ROD (LEXAN)
78	2419470	>CLAMP - ROD HOLDER [2.EA]
79	3319005	>CLAMP - ROD HOLDER w/ SLOT
80	3325002	>DISK - ROD HOLDER
81	9040310	>BOLT - HEX 5/16"-18 x 2" [3.EA]
82	9340101	>SCREW - SET 3/8"-16 x 5/8" [2.EA]
83	9430160	>WASHER - STAR 5/16" [3.EA]
84	2277002	>UNIVERSAL LINE RELEASE
85	3998600	>UNI-STACKER RELEASE
86	3992300	SWIVEL HEAD ASSEMBLY
87	0267001	►SIDE PLATE (RH)
88	0267002	►SIDE PLATE (LH)
89	0269726	►PULLY - SWIVEL HEAD
90	3397300	►WASHER - .735 OD X .36 ID
91	9010070	►HDW BEARING BRASS[2.EA]
92	2227820	BOOM END - TELESCOPIC (LEXAN)
93	2200148	SNAP & INSULATOR [2.EA]
94	1007334	MOUNTING BASE (LEXAN)
95	2994893	*BAG ASSEMBLY, MOUNTING (KIT #3)
96	2263102	NUT - HEX 1/4"-20 [4.EA]
97	2371712	WASHER - 9/32" FLAT [4.EA]
98	9100100	TERMINATOR
99	9100101	TERMINATOR CUSHION
100	9100620	TERMINATOR SNAP & SWIVEL
101	9280725	BOLT - TRUSS 1/4" - 20 x 2-1/2" [8.EA]
102	9370010	SCREW - #4 x 1/2" PPH [3.EA]
103	9950357	WASHER - LOCK 1/4" SPLIT [4.EA]
104	2210821	TELESCOPIC BOOM
105	2219822	>BASE TUBE CLAMP
106	2219823	>MID TUBE CLAMP
107	2222825	>MID TUBE COLLET
108	2222826	>BASE TUBE COLLET
109	2290828	►BOOM BASE TUBE (BLACK)
110	2290829	►BOOM MID TUBE (BLACK)
111	2290830	►BOOM END TUBE (BLACK)
112	2998905	SWIVEL BASE
113	2249001	>KNOB - RELEASE PIN (LEXAN)
114	2267001	>BASE PLATE (LEXAN)
115	2267002	>SWIVEL PLATE (LEXAN)
116	2267006	>INDEXING PLATE (TAPPED)
117	2277001	>NUT - RETAINER RELEASE
118	2287002	>SPRING - RELEASE PIN
119	2372100	>SCREW - #8 x 5/8" PPHMS [2.EA]
120	3392600	>RELEASE PIN
121	9010004	>BEARING - SWIVEL BASE [2.EA]

> PART OF ASSEMBLY

►ITEM CANNOT BE SOLD SEPARATELY

* PARTS USED BUT NOT SHOWN

PART NO: 339-8101

REVISIONS					
REV.	ECN NO.	DESCRIPTION	BY	DATE	APP'VD BY
A	15412	RELEASED	JLL	10/18/06	DJ

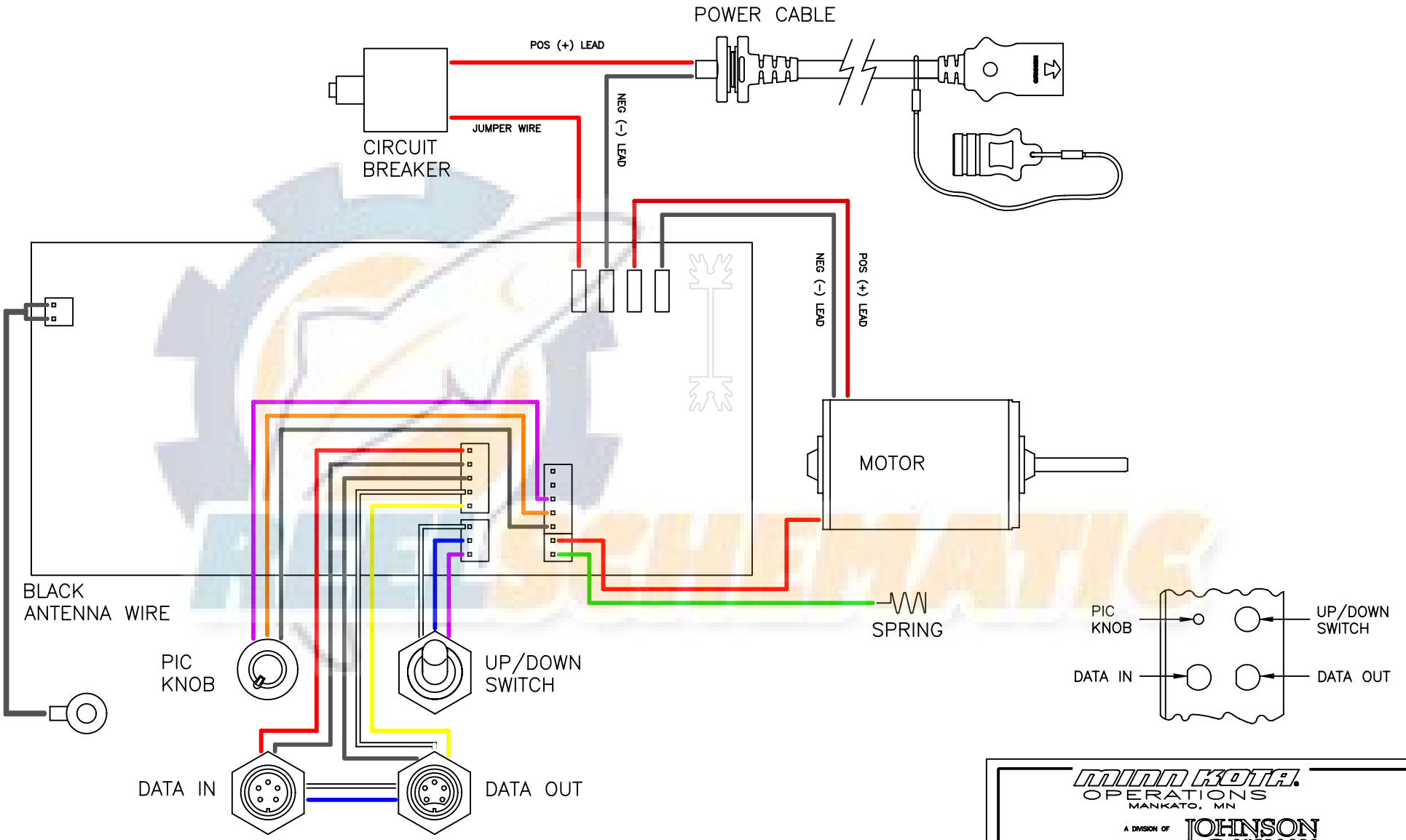

MINN KOTA OPERATIONS
MANKATO, MN
A DIVISION OF JOHNSON OUTDOORS

FINISH: NONE	PART NAME: MAG 20 DT WIRING DIAGRAM		A SIZE
MATERIAL: NONE	RELEASED ECN#: 15412	PART NO.: 339-8101	REV.: A
	SCALE: NONE	SHEET 1 OF 1	U/M: IN.

DRAWN BY: JLL	DATE: 10/18/06	
APP'VD BY: DJ	DATE: 10/18/06	
CHECKED BY:	DATE:	

THIRD ANGLE PROJECTION

TOLERANCES: UNLESS OTHERWISE SPECIFIED
.XXXX ±.0010
.XXX ±.005
.XX ±.010
.X ±.015
FRACTIONAL ± 1/64
ANGULAR DIMENSIONS ± 0°30'

CONFIDENTIAL PROPERTY-
This document is the confidential property of Johnson Outdoors and is loaned subject to return upon demand; title to same is never sold/transferred for any reason. This document is to be used only pursuant to written instructions of Johnson Outdoors. All rights to designs and inventions are reserved by Johnson Outdoors. Possession of this document is accepted subject to the foregoing.