MAG 5 HS METRIC™

for use with "AH" serial numbers

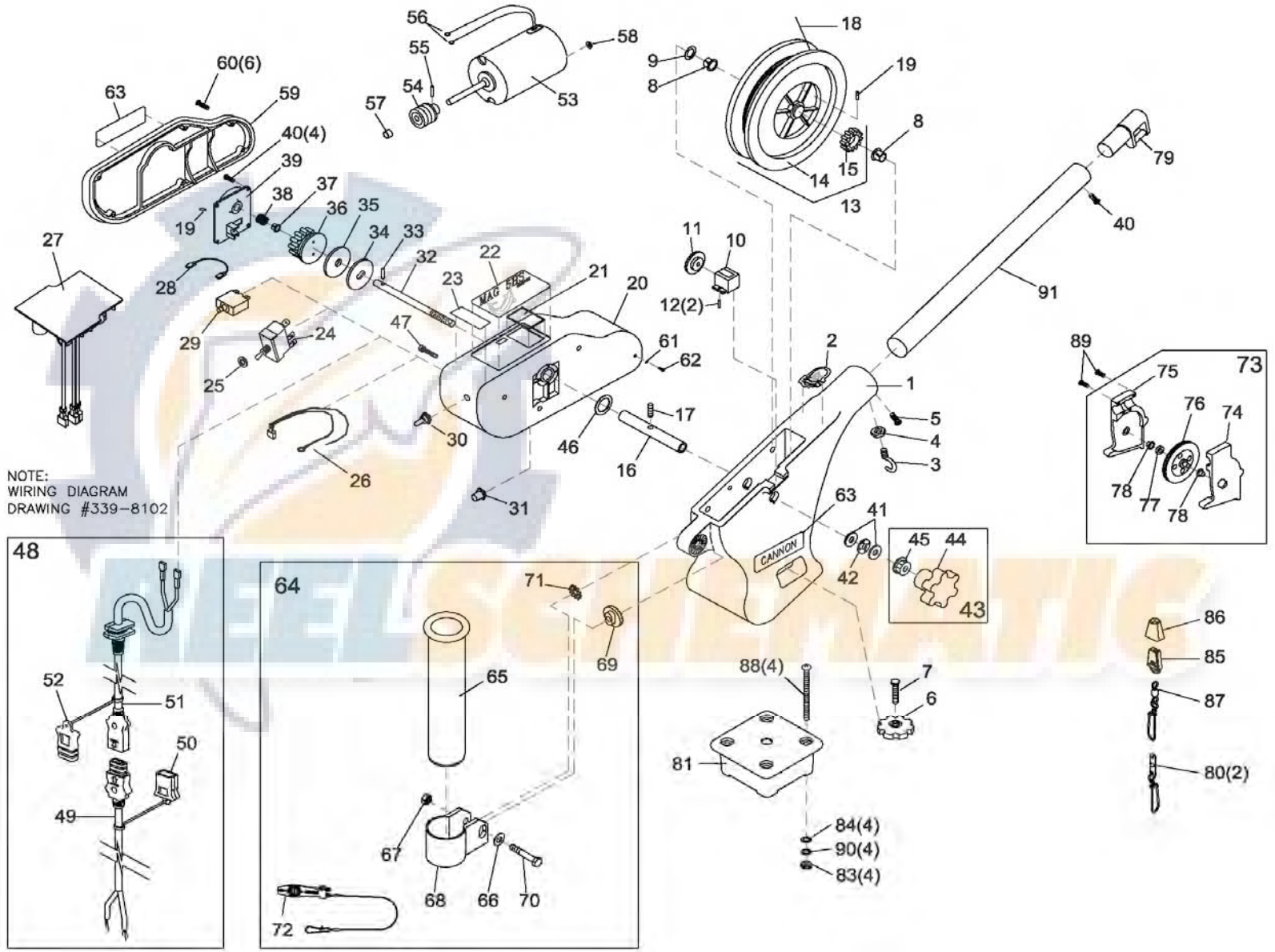

In the U.S.A., replacement parts may be ordered directly from CANNON Parts Dept., 121 Power Drive, Mankato, Minnesota 56001. In Canada, parts may be ordered from any of the Canadian Authorized Service Centers shown on the enclosed list. Be sure to provide the MODEL and SERIAL numbers of your downrigger when ordering parts. Please use the correct part numbers from the parts list. Payment for any parts ordered from the CANNON parts department, may be by cash, personal check, Discover Card, MasterCard or VISA. To order, call 1-800-227-6433 or FAX 1-800-527-4464.

1	3392500	FRAME - LARGE BLACK (LEXAN)
2	4427005	NOSE DECAL MAGNUM
3	9040040	HOOK - 1/4" - 20 ROLLED
4	2263102	NUT - HEX 1/4"-20
5	9280750	SCREW - 1/4" - 20 (RH) x 3/4" PPH
6	0849615	BASE LOCK KNOB
7	9040340	BOLT - 3/8"-16 X 1-1/2" HEX
8	9010001	BEARING - REEL SHAFT NYLINER [2.EA]
9	9430210	WASHER - 1-1/16" OD X 7/8" ID (NYLON)
10	3320011	DEPTH COUNTER - 3 DIGIT (METRIC)
11	3333010	COUNTER GEAR (METRIC)
12	0854654	COUNTER CUSHION/STOPPER [2.EA]
13	3374010	REEL ASSY - HS ELECTRIC (METRIC)
14	0274731	►REEL - MACHINED 3.75"
15	3333011	>GEAR REEL (METRIC)
16	1480071	SHAFT - REEL
17	9340131	SCREW - SET 5/16"-18 x 1-3/4" (REEL)
18	3775394	SPOOL CABLE SS [250.FT]
19	9100070	CABLE LEADER SLEEVE [2.EA]
20	3396552	MOTOR HOUSING - MAG 5 (LEXAN)
21	1497071	LENSE - WINDOW DISPLAY
22	3395612	DECAL - LARGE, MAG 5 HS
23	3395702	DECAL - POSITIVE ION CONTROL
24	2286792	SWITCH - UP/DN CONTROL
25	2286793	WASHER - SHIM .750 x .1 UP/DN SWITCH
26	050176	CABLE ASSY - MAG 5 (SHORT STOP)
27	050175	CONTROL BOARD - MAG 5
28	1296831	WIRE - CIRCUIT BREAKER JUMPER (RED)
29	3398205	CIRCUIT BREAKER - 30 AMP
30	1221490	UP/DN SWITCH BOOT
31	1221491	CIRCUIT BREAKER BOOT
32	1480070	SHAFT - DRIVE
33	9250002	PIN - DRIVE SHAFT 3/16" ROLL SS
34	0467695	BRAKE PLATE - REEL
35	1264670	CLUTCH PAD
36	1433074	GEAR - DRIVER WORM
37	9010003	BEARING - DRIVE SHAFT NYLINER
38	9400005	SPRING - SHAFT CONTACT
39	4421002	COVER - GEAR CASE
40	2372100	SCREW - #8 x 5/8" PPHMS [5.EA]
41	9010310	WASHER - THRUST [2.EA]
42	9010280	BEARING - THRUST
43	2998906	KNOB BRAKE
44	0649001	►KNOB - HAND ADJUST
45	9130390	►NUT - KNURLED INSERT 3/8"-24
46	1479070	O-RING - REEL SHAFT
47	9370205	SCREW - 1/4" x 3/4" HEX WASH HD [3.EA]
48	3993200	POWER CABLE ASSEMBLY
49	3393200	>POWER CABLE - BATTERY
50	3393201	>CAP - POWER CABLE - BATTERY
51	3393202	>POWER CABLE - MOTOR
52	3393210	>CAP - POWER CABLE -MOTOR
53	1458001	MOTOR 12V DC
54	1497070	GEAR - WORM MOTOR
55	9250001	PIN - MOTOR, 3/32" X 3/4" ROLL SS
56	700032	TERMINAL - MOTOR, FEM 12-10 [2.EA]
57	9010002	BEARING - MOTOR SHAFT
58	2263112	NUT - HEX #10-32 BZ
59	1421070	COVER - MOTOR HOUSING (LEXAN)
60	3393400	SCREW - #8-18 x 1-1/4" PPHSMS SS [6.EA]
61	701007	O-RING - SMALL
62	2332103	SCREW-#6-20 X 3/8"
63	3395630	DECAL - CANNON LARGE [2.EA]
64	2477001	BAG ASSY - SINGLE ROD HOLDER
65	0290796	>TUBE - ROD HOLDER
66	2151726	>WASHER - 5/16" FLAT
67	2383106	>NUT - 5/16"-18 SS
68	3319005	>CLAMP - ROD HOLDER w/ SLOT
69	3325002	>DISK - ROD HOLDER
70	9040310	>BOLT - HEX 5/16"-18 x 2"
71	9430160	>WASHER - STAR 5/16"
72	2277002	>UNIVERSAL LINE RELEASE
73	3992300	SWIVEL HEAD ASSEMBLY
74	0267001	►SIDE PLATE (RH)
75	0267002	►SIDE PLATE (LH)
76	0269726	►PULLY - SWIVEL HEAD
77	3397300	►WASHER - .735 OD X .36 ID
78	9010070	►HDW BEARING BRASS[2.EA]
79	2216403	BOOM END (LEXAN)
80	2200148	SNAP & INSULATOR [2.EA]
81	1007334	MOUNTING BASE (LEXAN)
82	2994892	*BAG ASSEMBLY, MOUNTING (KIT #2)
83	2263102	NUT - HEX 1/4"-20 [4.EA]
84	2371712	WASHER - 9/32" FLAT [4.EA]
85	9100100	TERMINATOR
86	9100101	TERMINATOR CUSHION
87	9100620	TERMINATOR SNAP & SWIVEL
88	9280730	BOLT - TRUSS 1/4" - 20 x 4" [4.EA]
89	9370010	SCREW - #4 x 1/2" PPH [3.EA]
90	9950357	WASHER - LOCK 1/4" SPLIT [4.EA]
91	2290828	24" BOOM - HEAVY DUTY

> PART OF ASSEMBLY

►ITEM CANNOT BE SOLD SEPARATELY

* PARTS USED BUT NOT SHOWN

PART NO: 339-8102

REVISIONS					
REV.	ECN NO.	DESCRIPTION	BY	DATE	APP'VD BY
A	15412	RELEASED	JLL	10/18/06	DJ

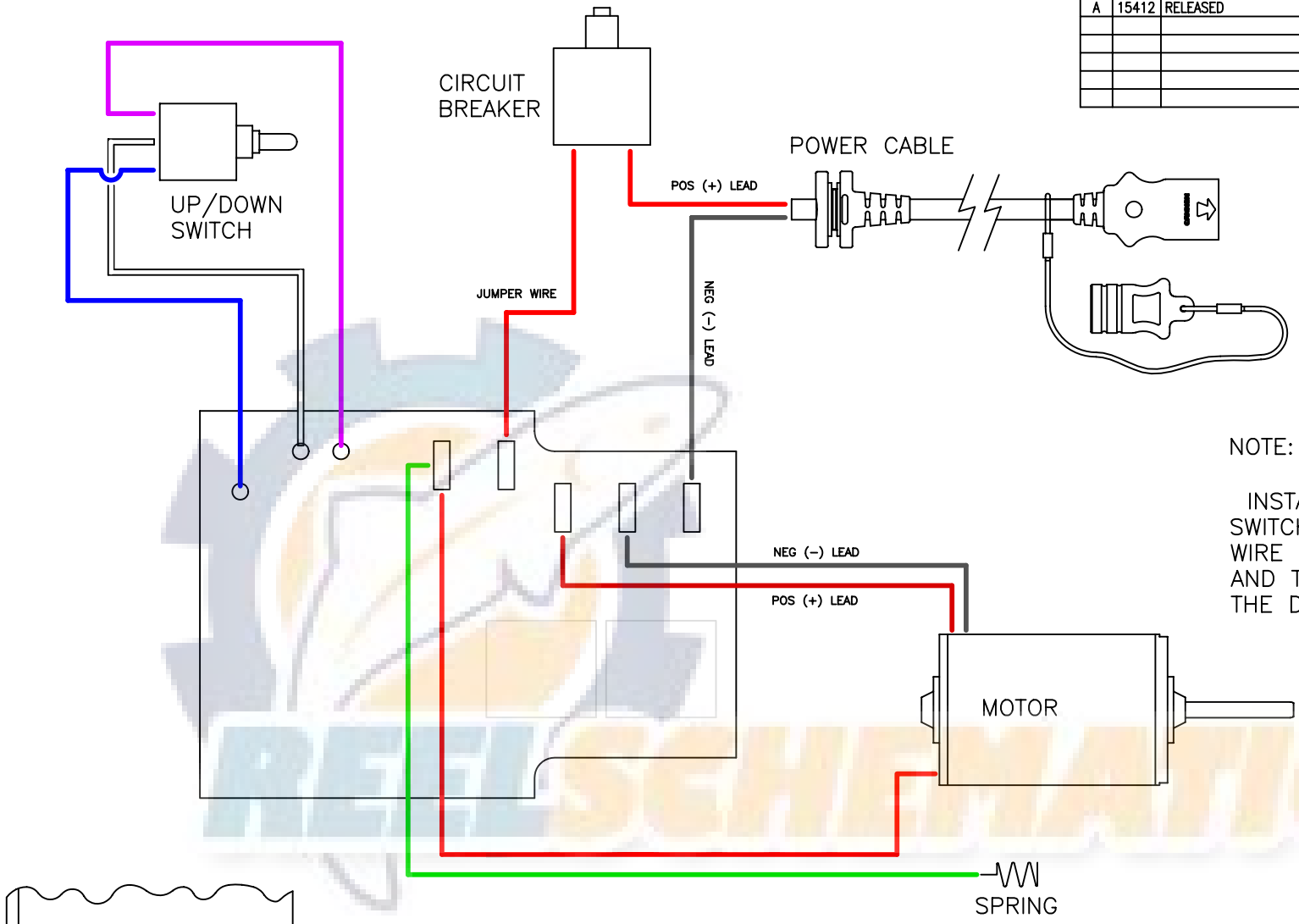

NOTE:

INSTALL THE UP/DOWN SWITCH WITH THE PURPLE WIRE IN THE UP POSITION AND THE BLUE WIRE IN THE DOWN POSITION

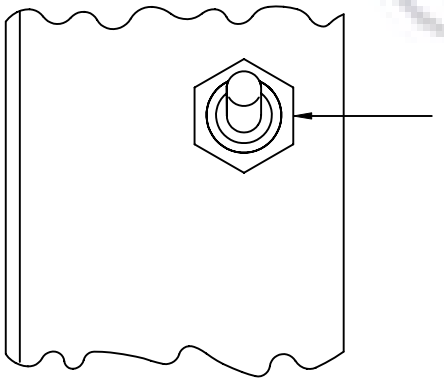

REEL SCHEMATIC

MINN KOTA OPERATIONS
MANKATO, MN
A DIVISION OF JOHNSON OUTDOORS

TOLERANCES:
UNLESS OTHERWISE SPECIFIED
.XXXX ±.0010
.XXX ±.005
.XX ±.010
.X ±.015
FRACTIONAL ± 1/64
ANGULAR DIMENSIONS ± 0°30'

CONFIDENTIAL PROPERTY-
This document is the confidential property of Johnson Outdoors and is loaned subject to return upon demand; title to same is never sold/transferred for any reason. This document is to be used only pursuant to written instructions of Johnson Outdoors All rights to designs and inventions are reserved by Johnson Outdoors. Possession of this document is accepted subject to the foregoing.

THIRD ANGLE PROJECTION

DRAWN BY:	JLL	DATE: 10/18/06
APP'VD BY:	DJ	DATE: 10/18/06
CHECKED BY:		DATE:

FINISH: NONE	PART NAME: MAG 10 & 5 WIRING DIAGRAM		A SIZE
MATERIAL: NONE	RELEASED ECN#: 15412	PART NO.: 339-8102	REV.: A
	SCALE: NONE	SHEET 1 OF 1	U/M: IN.