Low-Profile Swivel Base

ITEM #	PART#	DESCRIPTION
1	9010004	BEARING - SWIVEL BASE [2.EA]
2	2249001	KNOB - RELEASE PIN (LEXAN)
3	2267001	BASE PLATE (LEXAN)
4	2267002	SWIVEL PLATE (LEXAN)
5	2267006	INDEXING PLATE (TAPPED)
6	3392600	RELEASE PIN
7	2287002	SPRING - RELEASE PIN
8	2277001	NUT - RETAINER RELEASE
9	2372100	SCREW - #8 x 5/8" PPHMS [2.EA]

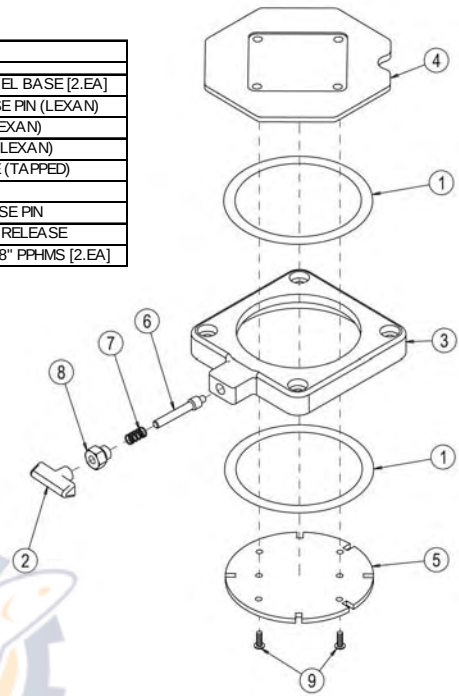

Stainless Steel Low-Profile Swivel Base

ITEM #	PART#	DESCRIPTION
1	3390000	BEARING-FLANGE 4.00 ID
2	3390110	KNOB-RELEASE PIN TS
3	3391910	BASE-SWIVEL TS
4	3391911	PLATE-SWIVEL TS
5	3391919	PLATE-INDEX TS
6	3392610	PIN-RELEASE SS
7	3392720	SPRING-COMP .26IDX.62LG
8	3393112	NUT-RET 7/16-14 THD TS
9	3393401	SCREW-#8-32 X 5/8 PPMS [2.EA]

