Tilt-Up Bracket

Parts List

BILL OF MATERIALS			
ITEM	PART #	PART NAME	QTY
1	233-3101	NUT-10-24 NYLOK 18-8 SS	4
2	339-0106	KNOB-BLACK, TILT-UP BRACKET	2
3	339-0505	PIN-HINGE, TILT-UP BRACKET	1
4	339-1704	WASHER-FLAT, .5 OD X .255 ID X .062 THK	12
5	339-1984	TOP-BLACK, TILT-UP BRACKET	1
6	339-1985	BASE-BLACK, TILT-UP BRACKET	1
7	339-3417	SCREW-10-24 X 1/4 PTHMS 18-8 SS	2
8	339-3421	SCREW-1/4X7/16 10-24 HSHSS 18-8 SS	2
9	339-3422	SCREW-1/4X5/16 10-24 HSHSS 18-8 SS	2
10	339-3432	SCREW-10-24 X 1/2 HSBHCS 18-8 SS	2
11	339-6000	BEARING-SLEEVE, 1/4 ID X 3/8 OD X 1/4 LG	2
12	339-7210	SLIDER, TILT-UP BRACKET	2
13	399-4810	BAG ASSY, TILT-UP BRACKET MTG	1
14	226-3103	> NUT-1/4-20 NYLOCK 18-8 SS	4
15	9280711	> SCREW-1/4-20 X 1 PTHMS 18-8 SS	4
16	9280720	> SCREW-1/4-20 X 2 PTHMS 18-8 SS	4
17	339-7123	* MANUAL, TILT-UP BRACKET	1

> - PART IN SUB-ASSEMBLY

* - USED BUT NOT SHOWN

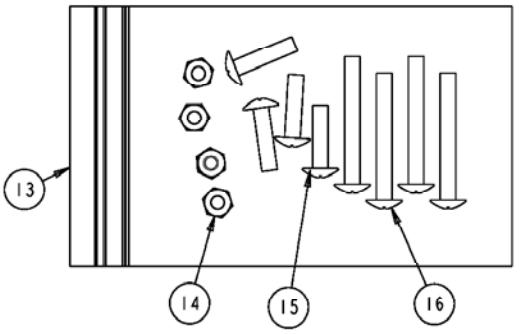

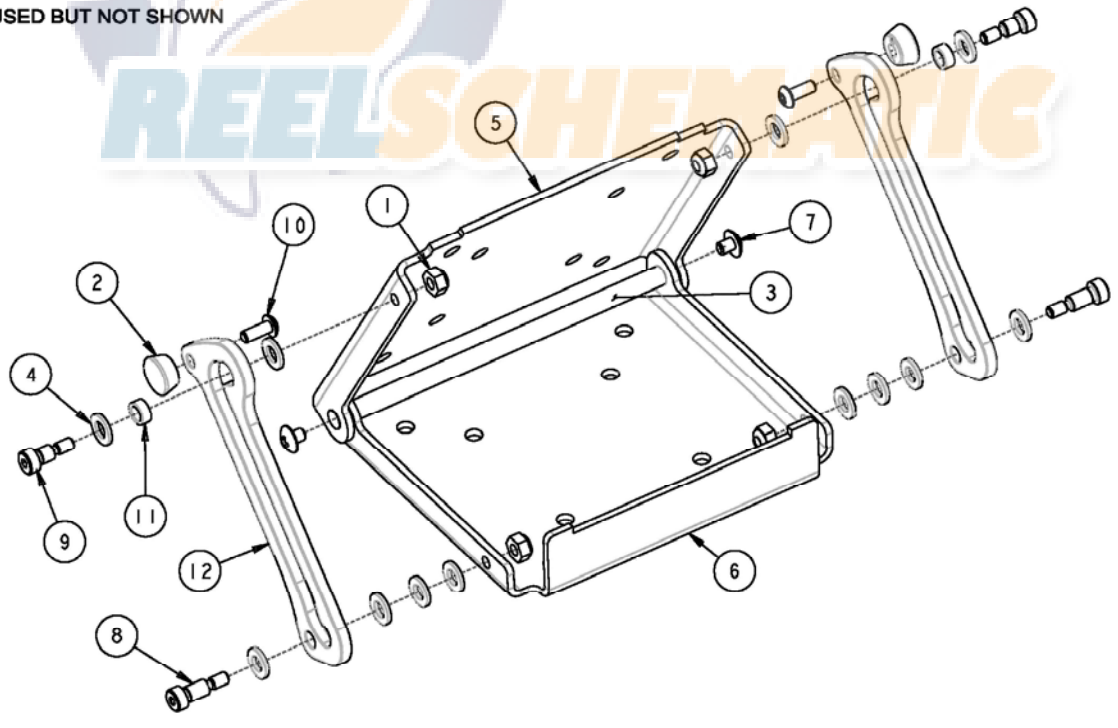

REELSCHEMATIC