Digi-Troll 5 Tournament Series

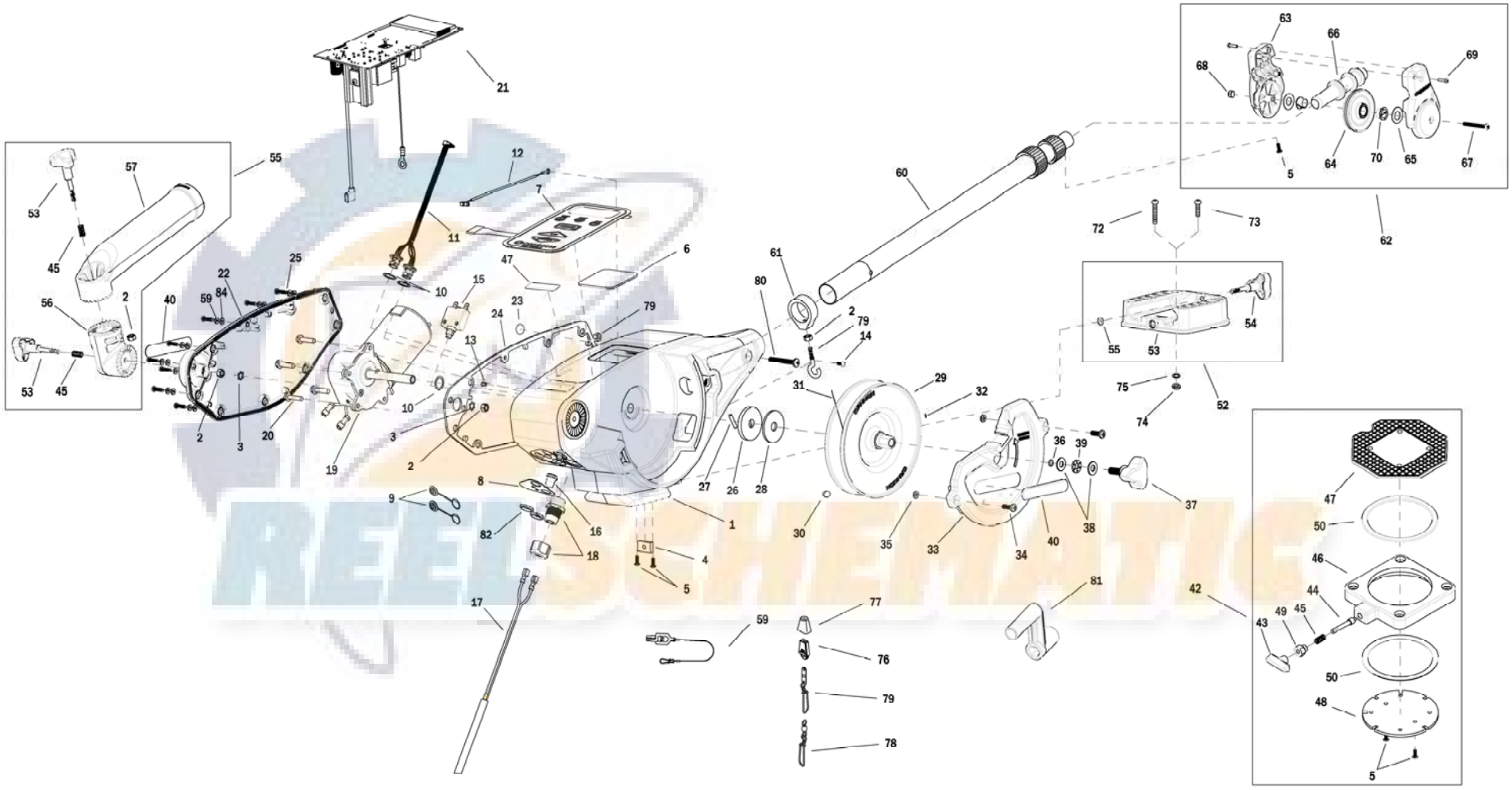

1902320 Digi-Troll 5 TS

1	3392525	FRAME, TS
2	2263102	NUT-HEX 1/4-20 SS 300SRS
3	3394722	INSERT, PUSH ON
4	3394702	INSERT, BASE
5	2373450	SCREW-#8-18 X 3/8 THD* (SS)
6	3396510	LENS-WINDOW MAG DTIV
7	3394015	KEYPAD, DIGI-TROLL 5
8	3396602	SEAL PLATE, DT5
9	700176	CON XCAP MINI-CON PANEL MOUNT
10	3391730	WASHER, SEAL, DATA
11	3391220	HARNESS, COMM
12	3391223	HARNESS, RF ANTENNA
13	1234002	HDW INSERT SS PRESS 1/4IN(SUB)
14	3393426	SCREW-#6-32x3/8,TRIM'D HEX CAP
15	3398205	CIRCUIT BREAKER, 25 AMP
16	1221491	BOOT CIRCUIT BREAKER
17	3993220	ASSY, POWER CABLE, RETRO(SUB)
18	3392920	STRAIN-RELIEF, HEYCO M4502
19	3996515	MOTOR/GEAR HOUSING ASSY
20	3393411	SCREW-FLANGE HEX HI-LO
21	3394007	ASY PCA,DIGI-TRLL 5,5TS
22	3390204	COVER, MOTOR, TS
23	401966-3	MIC VENT,PTFE LU LRA MATERIAL
24	3396902	GASKET, COVER
25	3393480	SCREW-#10X.75"PPH HI-LO SS
26	3391907	PLATE, CLUTCH SHAFT
27	3392640	PIN, DRIVESHAFT
28	3391711	PAD, CLUTCH
29	3777908	REEL, ROUGH, 3.75" OD, SS
30	1459666	CERAMIC MAGNET P/N 42-B-5020
31	3775397	400' CABLE
32	9100070	CON LEADER SLEEVE
33	3390206	COVER, REEL, TS
34	2373434	SCREW-1/4-20 X 3/4 SS PPMS
35	2071718	WASHER #10 NYLON RETAINING
36	3394605	O-RING, KNOB
37	3390103	KNOB, SOFT GRIP, CLUTCH
38	3391737	HDW WASHER, THRUST
39	9010280	HDW BEARING, THRUST
40	3395634	DECAL- SIDE, BLACK
41	3395711	DECAL-PIC TS
42	2998905	CNN ASY, SWIVEL BASE
43	2249001	HDW KNB RELEASE PIN
44	3392600	PIN - RELEASE
45	2287002	HDW SPRING RELEASE PIN
46	2267001	ASY PLATE BASE MACHINED
47	2267002	BRK PLATE SWIVEL
48	3391919	PLATE, INDEX TS
49	2277001	HDW RETAINER RELEASE NUT
50	9010004	HDW BEARING SWIVEL BASE
51	3991930	ASY, MNT BASE DT/MAG(SUB)
52	3391955	BASE-MOUNT, DT PRO/MAG ST
53	3390101	KNOB-CANNON, SOFT GRIP
54	3393000	RING, RETAINING, 1/4" SHAFT
55	3991904	ASSY-CNN, ROD HOLDER
56	3394200	ARM, DUAL AXIS-ROD HOLDER
57	3392033	TUBE, DUAL AXIS RD HLDR
58	2200109	SALTWATER RELEASE
59	3394602	WASHER, FLAT, #8, SS
60	3392010	ASY BOOM TELESCOPIC, SS
61	3397900	BALL HOOK EXTRUSION
62	3990200	ASSY-CNN, BOOM END (SUB)
63	3392520	CASE, PULLEY
64	3392300	SHEEVE, PULLEY
65	3391507	SHIM, BOOM END
66	3392013	BOOM END, NEW
67	3393485	SCREW-#10-24X1.75 PPHMS S
68	3393124	NUT-#10-32 NYLOK 18-8 SS
69	2303412	SCREW-#6-20 X 5/8 SELF TAP
70	3390005	BEARING-NYLINER, #8L5-1/2-F
71	9280720	HDW SCR 1/4 20X2 TRUSS HD PHIL
72	9280713	HDW SCR 1/4 20X1 1/2 TRUSS HEA
73	2263103	NUT-1/4-20 NYLOCK SS
74	2371712	WASHER-FLAT 9/32 X 5/8 X 1/16
75	9100100	CON TERMINATOR
76	9100101	CUSHION SLEEVE TERMINATOR
77	9100620	HDW SNAP SWIVEL 4/0-37 MARLIN
78	2200148	ASY SNAP & INSULATOR
79	9040040	HDW BOLT 1/4-20 ROLLEDTHD HOOK
80	3393461	SCREW-1/4-20 x 2" SS, PPH
81	3390910	HANDLE-CRANK, MANUAL
82	1459666	CERAMIC MAGNET
83	3393113	NUT, HEX, MINI-CON-X
84	3391732	WASHER, SEALING

Digi-Troll 5 Series Wiring Diagram

