CANNON

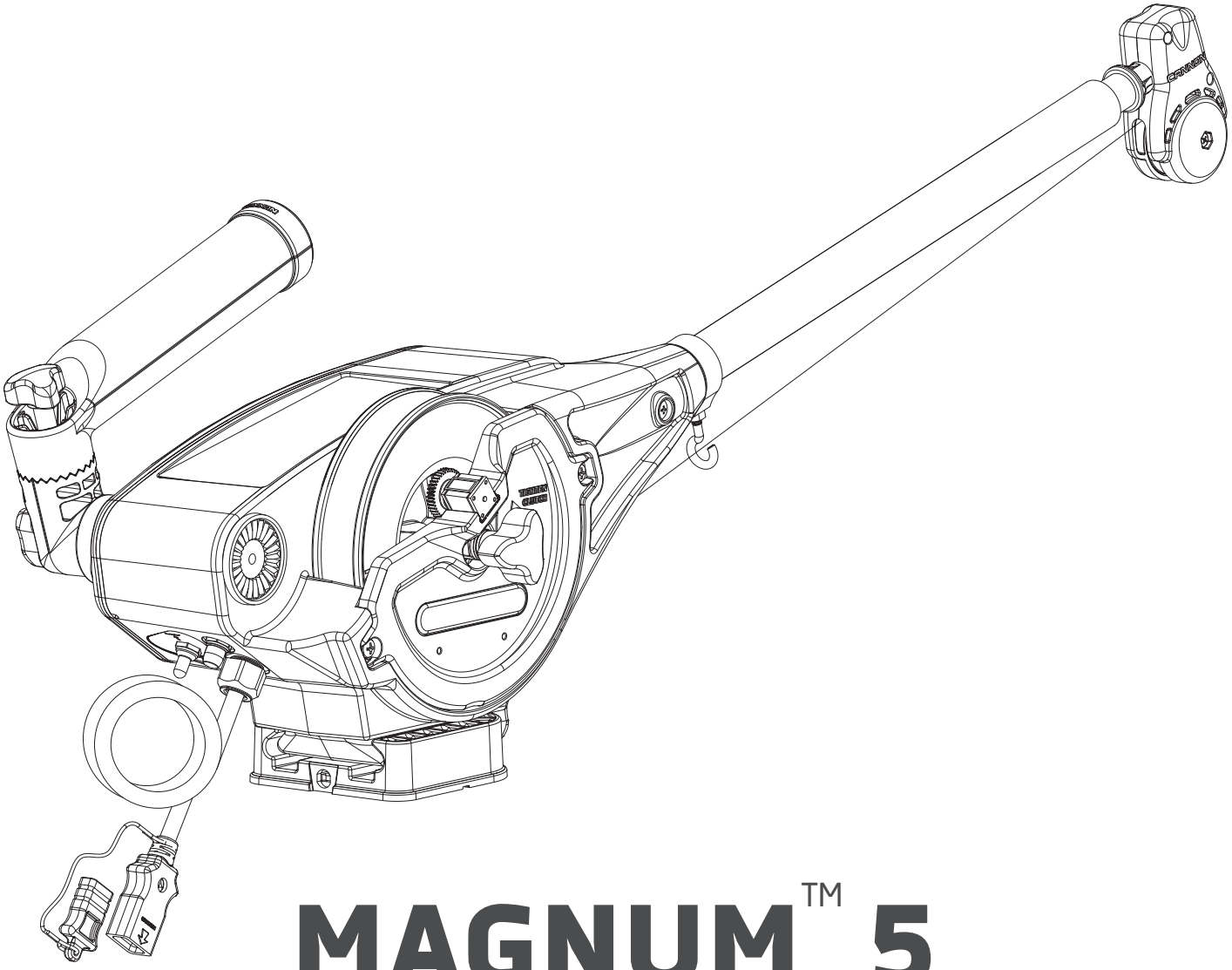

MAGNUM™ 5
MAGNUM™ 10
MAGNUM™ 10 TS

ELECTRIC DOWNRIGGERS

Owner's Manual

INTRODUCTION

THANK YOU

Thank you for purchasing a Cannon downrigger. We have designed your new downrigger to be an accurate and reliable tool that will enhance fishing control and improve your ability to catch fish. We hope that you enjoy the use of your new downrigger and enjoy the benefit of controlled depth fishing for years to come by always following safe boating practices and laws wherever you are fishing.

REGISTRATION

Remember to keep your receipt and immediately register your downrigger. To receive all the benefits for your product warranty, please fill out and mail the enclosed registration card, or you may complete registration online at cannondownriggers.com.

SERIAL NUMBER

Your Cannon 11-character serial number is very important. It helps to determine the specific model and year of manufacture. When contacting Consumer Service or registering your product, you will need to know your product's serial number. We recommend that you write the serial number down in the space provided below so that you have it available for future reference.

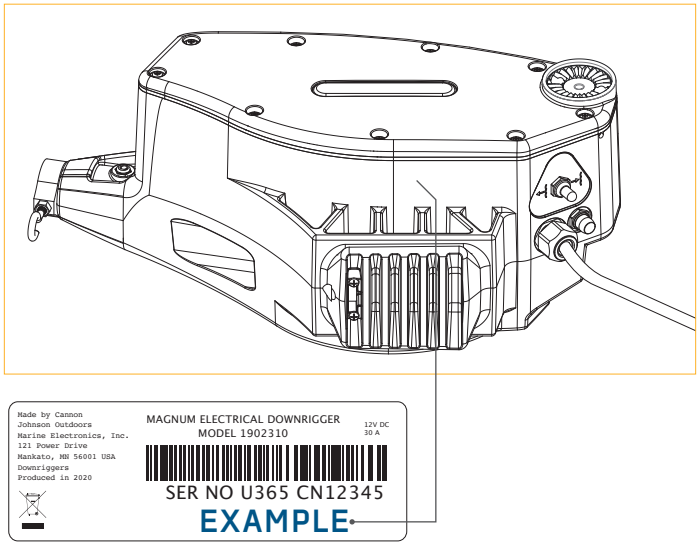

NOTICE: The serial number on your Cannon Magnum downrigger is located on the bottom of the downrigger frame.

PRODUCT INFORMATION *(For Consumer Reference Only)*

Model: _____

Serial Number: _____

Purchase Date: _____

Store Where Purchased: _____

© 2020 | Johnson Outdoors Marine Electronics, Inc. | cannondownriggers.com

TABLE OF CONTENTS

SAFETY CONSIDERATIONS 4
WARRANTY 5
KNOW YOUR BOAT 6
FEATURES 7
INSTALLATION 8
- Installing the Magnum 8
  - Installation Parts List 8
  - Mounting Considerations 9
  - Tools and Resources Required 10
  - Installation 11
    - Installing the Base 11
    - Installing the Clutch Knob 14
    - Installing the Boom or Telescopic Boom 15
    - Installing the Swivel Head/Boom End 19
    - Terminating the Downrigger Line 20
    - Installing the Rear Mount Rod Holder 26

BATTERY & WIRING INSTALLATION 28
- Rigging & Installation Guidelines 28
- Conductor Gauge and Circuit Breaker Sizing Table 28
- Recommendations for Maintaining Boat's Electrical Condition 29
- Electrical Specifications & Wiring Instructions 29
- Connecting to the Battery 30
- Powering Multiple Downriggers 30
- Additional Considerations 31

WIRING DIAGRAM 32
FISHING WITH THE DOWNRIGGER 33
- Downrigger Operation 33
- Attaching the Snap Assembly with Insulator 34
- Attaching a Line Release 35
- Safe Transport 36

USING THE DOWNRIGGER 37
- Controlling the Magnum™ and Magnum™ TS 37
- Positive Ion Control 37
- Short Stop 38

BLOWBACK CALCULATIONS 39
- Blowback 39

SERVICE & MAINTENANCE 40
- Attaching the Crank Handle Assembly 40
- Removing the Spool Cover and Replacing the Spool 41
- Replacing the Clutch Pad 43
- Cable Replacement 44
- Adjusting the Length of the Telescopic Boom 45
- Troubleshooting & FAQ's 46
- For Further Troubleshooting and Repair 47

COMPLIANCE STATEMENTS 48
- Environmental Compliance Statement 48
- WEEE Directive 48
- Disposal 48
- Environmental Ratings 48
- Trademarks 48

PARTS DIAGRAM & PARTS LIST 49
NOTES 69

SAFETY CONSIDERATIONS

Please thoroughly read this user manual. Follow all instructions and heed all safety and cautionary notices below. Use of this downrigger is only permitted for persons that have read and understood these user instructions. Minors may use this product only under adult supervision.

⚠ WARNING

You are responsible for the safe and prudent operation of your vessel. We have designed your Cannon product to be an accurate and reliable tool that will enhance boat operation and improve your ability to catch fish. This product does not relieve you from the responsibility for safe operation of your boat. You must avoid hazards to navigation and always maintain a permanent watch so you can respond to situations as they develop. You must always be prepared to regain manual control of your boat. Learn to operate your Cannon product in an area free from hazards and obstacles.

⚠ WARNING

It is recommended to only use Johnson Outdoors approved accessories with your Cannon. Using non-approved accessories including those used to mount or control your product may cause damage, unexpected operation and injury. Be sure to use the product and all approved accessories, including remotes and/or devices, safely and in a manner directed to avoid accidental or unexpected operation. Keep all factory installed parts in place including motor, electronic and accessory covers, enclosures and guards. Failure to adhere to this warning may affect your warranty.

⚠ WARNING

Do not touch the Spool/Reel while the downrigger is in use. Holding or touching it may result in moderate to severe injuries.

© 2020 | Johnson Outdoors Marine Electronics, Inc. | cannondownriggers.com

WARRANTY

CANNON® LIMITED WARRANTY

Johnson Outdoors Marine Electronics, Inc. ("JOME") extends the following limited warranty to the original retail purchaser only. Warranty coverage is not transferable.

CANNON® LIMITED LIFETIME WARRANTY

JOME warrants to the original purchaser that if the accompanying product (see exclusions below) proves to be defective in material or workmanship within the following warranty periods, JOME will, at its option, either repair or replace same without charge (but no cash refunds will be made):

The boom, motor (if applicable), and reel, plus all plastic parts, including but not limited to frames and bases, will be free from defects in materials and workmanship, subject to normal wear and tear, for the original purchaser's lifetime.

All other items will have 1-year limited warranties from the date of original retail purchase, except THE FOLLOWING ITEMS THAT HAVE NO WARRANTY: swivel lock pin, weights, and wire cable.

LIMITATION AND EXCLUSION OF IMPLIED WARRANTIES AND CERTAIN DAMAGES

THERE ARE NO EXPRESS WARRANTIES OTHER THAN THESE LIMITED WARRANTIES. JOME DISCLAIMS LIABILITY FOR INCIDENTAL AND CONSEQUENTIAL DAMAGES, AND IN NO EVENT SHALL ANY IMPLIED WARRANTIES (EXCEPT ON THE BOOM, MOTOR, REELS, AND ALL PLASTIC PARTS), INCLUDING ANY IMPLIED WARRANTY OF MERCHANTABILITY OR FITNESS FOR PARTICULAR PURPOSE, EXTEND BEYOND ONE YEAR FROM THE DATE OF PURCHASE (AND IN THE CASE OF THE SWIVEL LOCK PIN, WEIGHTS, AND WIRE CABLE, JOME DISCLAIMS ALL IMPLIED WARRANTIES). THIS WRITING CONSTITUTES THE ENTIRE AGREEMENT OF THE PARTIES WITH RESPECT TO THE SUBJECT MATTER HEREOF; NO WAIVER OR AMENDMENT SHALL BE VALID UNLESS IN WRITING SIGNED BY JOME.

Some states do not allow limitations on how long an implied warranty lasts or the exclusion or limitation of consequential damages, so the above limitation or exclusion may not apply to you. This warranty gives you specific legal rights, and you may also have other rights that vary from state to state.

CANNON® SERVICE POLICY

AFTER THE APPLICABLE WARRANTY PERIOD

After the applicable warranty period, or, if one of the above exclusions applies, Cannon® products will be repaired for a charge of parts plus labor. All factory repairs, after the applicable warranty period, carry a 90-Day Limited Warranty, subject to the exclusions and limitations stated above.

TO ENFORCE WARRANTY OR TO OBTAIN REPAIRS AFTER WARRANTY

To obtain warranty service in the U.S., the downrigger believed to be defective and the proof of original purchase (including the date of purchase) must be presented to a Cannon® Authorized Service Center or to Cannon®'s factory service center in Mankato, MN. Except as noted below, any charges incurred for service calls, transportation or shipping/freight to/from the Cannon® Authorized Service Center or Cannon®'s factory, labor to haul out, remove, re-install or re-rig products for warranty service, or any similar items are the sole and exclusive responsibility of the purchaser. Warranty service can be arranged by contacting a Cannon® Authorized Service Center or by contacting the factory at 1-800-227-6433 or by email to service@cannondownriggers.com. If the necessary repairs are covered by the warranty, we will pay the return shipping charges to any destination within the United States. Downriggers purchased outside of the U.S. (or parts of such downriggers) must be returned prepaid with proof of purchase (including the date of purchase and serial number) to any Authorized Cannon® Service Center in the country of purchase.

NOTICE: Do not return your Cannon® downrigger or parts to your retailer. Your retailer is not authorized to repair or replace them.

Major parts, such as the motor and main frame, must be returned to JOME in Mankato, Minnesota, or a Cannon® Authorized Service Center, for repair or replacement. To reduce shipping costs, we suggest removal of loose parts such as the boom and rod holders. Small parts that can be easily removed such as the handle and/or the counter, may be removed from the downrigger and returned for repair or replacement. **Retain your sales receipt.** Proof of purchase must accompany product when returned.

RETURN ADDRESS:

Johnson Outdoors Marine Electronics, Inc.
Attn: Cannon Service Dept.
121 Power Drive
Mankato, MN 56001

KNOW YOUR BOAT

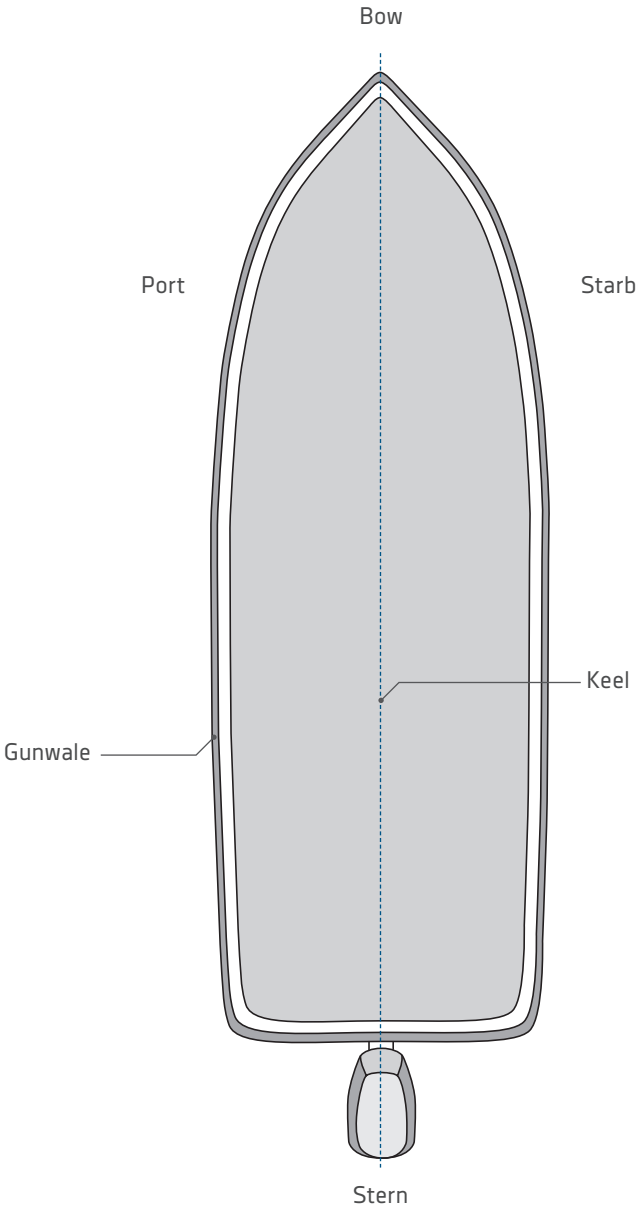

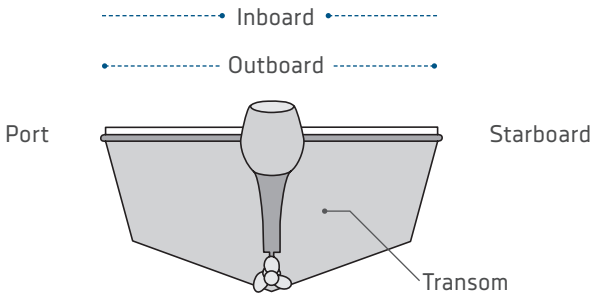

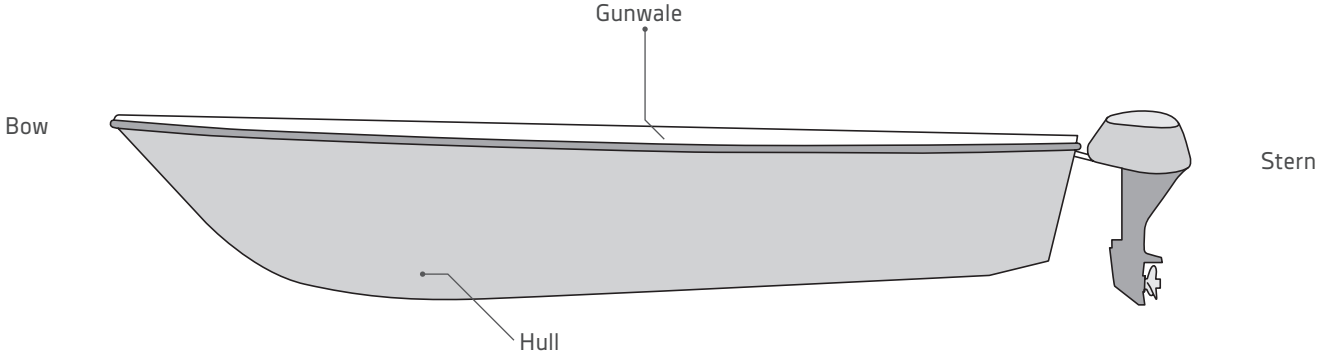

© 2020 | Johnson Outdoors Marine Electronics, Inc. | cannondownriggers.com

FEATURES

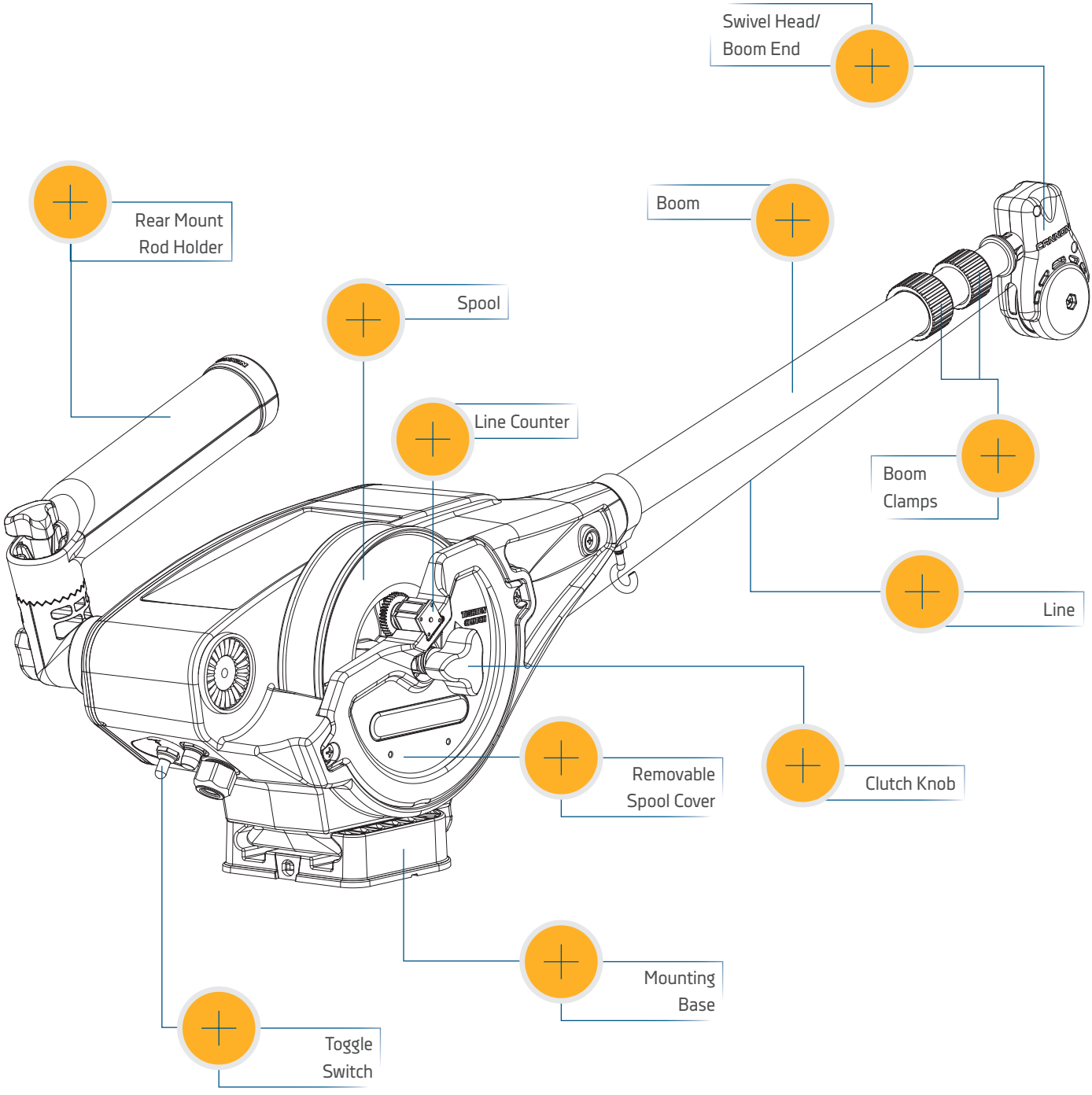

NOTICE: Specifications subject to change without notice. This diagram is for reference only and may differ from your actual downrigger. The Magnum 5 does not have a Telescopic Boom or Boom Clamps.

INSTALLATION

INSTALLING THE MAGNUM

Your new Cannon Magnum comes with the hardware you'll need to directly install it to the boat. Cannon recommends mounting your downrigger using a deck plate and also offers a variety of accessories to customize your installation. Read these installation instructions to learn more and visit cannondownriggers.com for a full list of accessories. To install the downrigger directly to the boat, please follow the instructions provided in this manual. Please review the parts list, mounting considerations and tools needed for installation prior to getting started. For additional product support, please visit cannondownriggers.com.

INSTALLATION PARTS LIST

Item / Assembly	Part #	Description	Qty.
A	✖	CANNON DOWNRIGGER ASSEMBLY	1
B	3991913	CNN ASSY, SWIVEL BASE	1
C	3991930	ASSY-CNN, MNT BASE	1
D	3392010 ♦	ASSY, BOOM TELESCOPIC, SS *TS*	1
E	2210821	ASY BOOM TELESCOPIC	1
F	3991904	ASSY-CNN, ROD HOLDER	1
G	3994807	ASSY-BAG, DT PRO/MAG ST	1
H	3994815	BAG ASSY, BOOM END	1
U	2277002A	ASY HDW RELEASE UNIVERSAL	2
V	2200109 ♦	SALTWATER RELEASE, OR8 BE *TS*	2
2	9280720	HDW SCR 1/4 20X2 TRUSS HD PHIL	4
4	2371712	WASHER-FLAT 9/32 X 5/8 X 1/16	4
6	2263103	NUT-1/4-20 NYLOCK SS	5
8	9280713	HDW SCR 1/4 20X1 1/2 TRUSS HEA	4
10	3390103	KNOB, SOFT GRIP, CLUTCH	1
12	2263102	NUT-HEX 1/4-20 SS 300SRS	1
14	9040040	HDW BOLT 1/4-20 ROLLEDTHD HOOK	1
16	3393461	SCREW-1/4-20 x 2" SS, PPH	1
18	3397900	BALL HOOK EXTRUSION	1
20	3390101	KNOB-CANNON, SOFT GRIP	2/4
22	2287002	HDW SPRING RELEASE PIN	2/4
24	3392033	TUBE, DUAL AXIS RD HLDR	1/2
26	3394200	ARM, DUAL AXIS-ROD HLDR	1/2
28	2372100	SCREW-#8-18 X 5/8 THD* (SS)	1
30	9100101	CUSHION SLEEVE TERMINATOR	1
32	9100100	CON TERMINATOR	1
34	2200148	ASY SNAP & INSULATOR	1
36	9100620	HDW SNAP SWIVEL 4/0-37 MARLIN	1
38	3990200	ASSY-CNN, BOOM END	1
40	3390910	HANDLE-CRANK, MANUAL	1
42	3397175 ▲	INSTRCT, INSTALL, MAGNUM	1
44	3397139 ▲	MANUAL DISCLAIMER DWNLOAD INFO	1
46	2290828	24" BOOM-HEAVY DUTY (MAG 5)	1
48	3395905	ADAPTER, BOOM END (MAG 5)	1

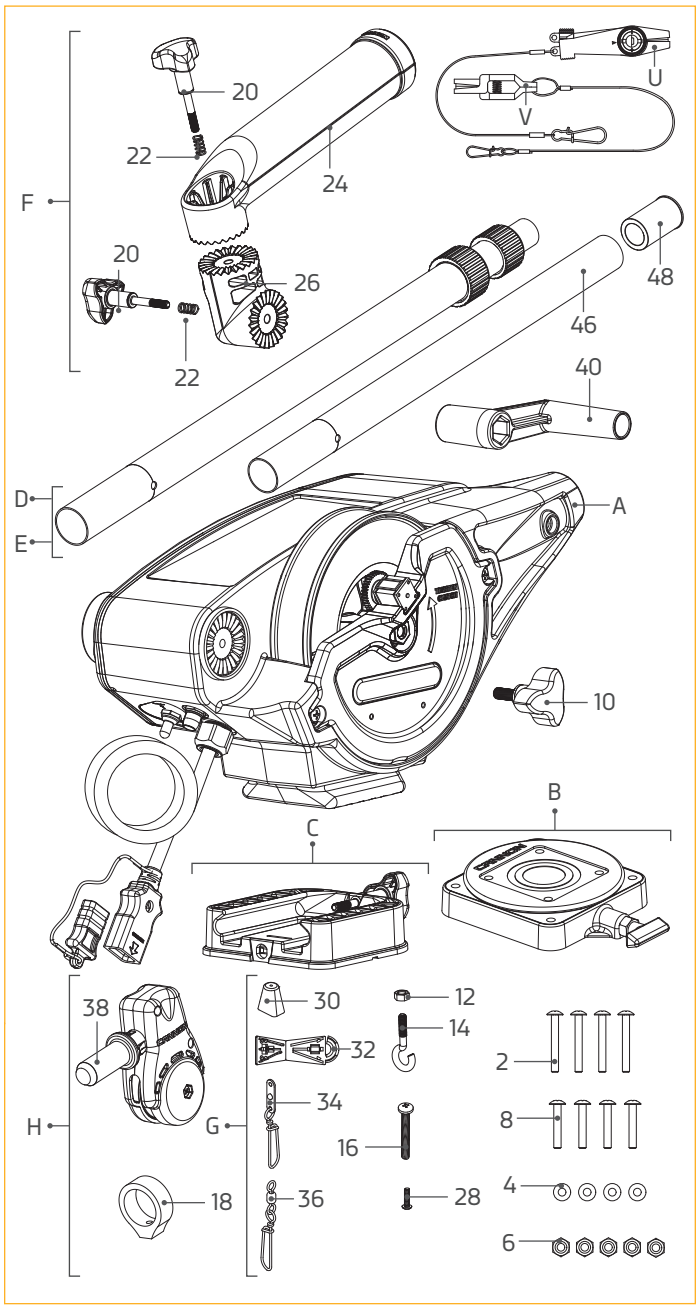

▲ *Not shown on Parts Diagram.*
✖ *This part is included in an assembly and cannot be ordered individually.*

♦ *Only available with the Magnum TS series downrigger.*

© 2020 | Johnson Outdoors Marine Electronics, Inc. | cannondownriggers.com

MOUNTING CONSIDERATIONS

Before mounting a Cannon downrigger, please give consideration to the following:

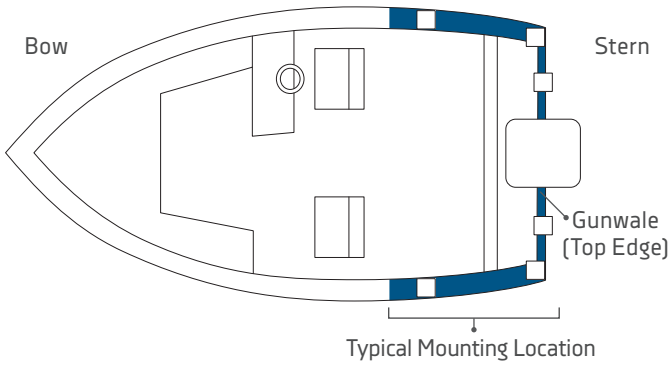

1. **Clear mounting location** - Choose a good location on your boat to mount your downrigger. Downriggers are mounted to the Gunwale of the boat. Make sure the area under the mounting location is clear to drill holes and install nuts and washers. Make sure that the mounting location is free from cables or wiring and other critical boat structures. The movable parts of the downrigger, such as the telescopic boom should be positioned so that the weight is far enough beyond the edge of the boat so that it and the downrigger will not encounter any obstructions during operation. In some cases, the profile of the Gunwale is raised which may prevent the downrigger from sitting all the way against the face of the Gunwale. It may be necessary to shim or cut away around these areas to securely complete the installation. Mounting accessories are recommended to accommodate difference in mounting locations and mounting situations.

2. **Operation of the downrigger** - Consider the operation of the downrigger at the selected mounting location. A downrigger should be mounted in a location where it is easy to observe your fishing rod and react quickly to operate the downrigger once there is a fish on the line. There should be enough space to use the downrigger comfortably and with proper ergonomics. It should be easy to reach while still maintaining control of the boat and to retrieve gear. The location of the telescopic boom, weight and rod holder when fully installed should not encounter obstructions. The power cables should reach their intended power source from the mounting location. When installing multiple downriggers, consider the spacing between downriggers units. Mount the downrigger in a location where it is easy to route transducer cables and other downrigger accessory cables and wiring, either to a power source or sonar unit. Make sure that the mounting location does not create a tripping hazard for power cables or accessories used during operation.

3. **Mounting accessories** - Consider the use of a mounting accessory when installing your downrigger. Consider the location and angle of the rod placement when the downrigger is fully installed on the mounting surface. A deck plate is recommended to provide adequate support and to maximize the capability of the product. Cannon offers a complete line of mounting accessories that allow you to optimize your installation to fit the way you fish. Before making any permanent changes to your boat, consider what accessories might be used in your application. To see the complete line of mounting accessories review the variety of accessories explained in this document or visit cannondownriggers.com.

NOTICE: When using the telescopic boom, we strongly recommend the use of a deck plate on all boats to provide adequate stability for the downrigger.

NOTICE: This downrigger weighs approximately 19 lbs. We recommend having a second person help with the installation.

NOTICE: Illustrations are for reference only and may differ from your actual installation.

INSTALLING THE MAGNUM

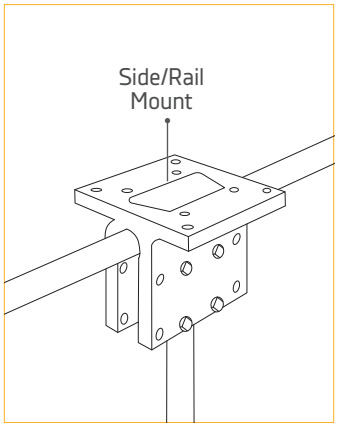

SIDE/RAIL MOUNTS

Can be mounted to a welded T-section. Side/Rail Mounts *(Item No. 2250940)* can also be used at the two rail section butt joint. In both installations it is recommended to use a non-slip material, such as rubber or a thin wood sheet, between metal surfaces.

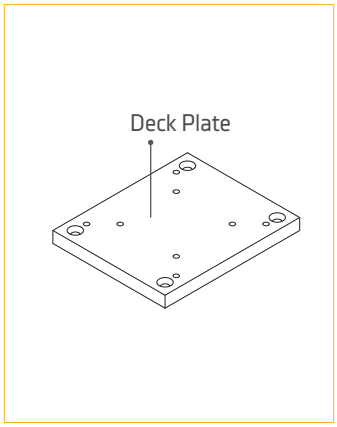

DECK PLATES

Cannon deck plates prevent deflection and add stability to decks. Recommended for attaching the downrigger for initial installation or for mounting accessories. They are necessary to add extra strength to the base material of the boat. Options include Deck Plate *(Item No. 2200693)*.

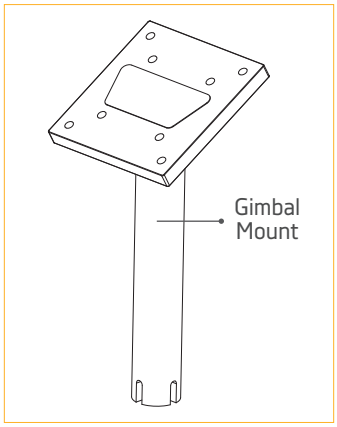

GIMBAL MOUNTS

Designed to fit medium-sized flush mounted rod holders built into the gunwale of larger fishing boats and cruisers. Only sturdy, high quality rod holders should be used for this temporary mounting system. Gimbal mounts are available in 9” or 12” post lengths with Standard *(Item No. 2250927 and 2250928)* and Stainless Steel options *(Item No. 1903005 and 1903006)*.

TOOLS AND RESOURCES REQUIRED

- 9/32” Drill Bit
- Pencil, Marker or similar Marking Tool
- Drill
- 7/16” Box End Wrench
- Wire Cutters
- Pliers
- #3 Phillips Screw Driver
- Needle Nose Pliers
- Masking tape
- Anti-seize
- A second person to help with the installation

© 2020 | Johnson Outdoors Marine Electronics, Inc. | cannondownriggers.com

INSTALLATION

INSTALLING THE BASE

1

Item(s) needed:

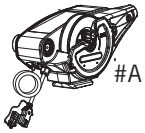 #A x 1

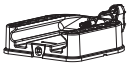 #C x 1

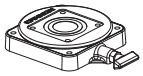 #B x 1

a. Review the mounting considerations at the beginning of the installation and select a mounting location. Make sure the downrigger is not connected to a power source.

⚠ WARNING

Make sure the downrigger is not connected to a power source.

b. Take the Mounting Base (Assembly #C) and attach it to the Downrigger Assembly (Assembly #A). The Mounting Base is keyed with the bottom of the Downrigger Assembly. The Soft Grip Knob on the Mounting Base screws into a metal plate on the bottom of the Downrigger Assembly. Secure the Mounting Base to the Downrigger Assembly so that the Soft Grip Knob is in the correct position.

c. In the final Installation, the Mounting Base is installed on the Swivel Base (Assembly #B) for Magnum 10 downriggers. If desired, hold the Downrigger Assembly (Assembly #A) with the Swivel Base at the selected mounting location to check fit and function. Use a second person to help with the installation and test to make sure that the downrigger will operate as desired.

d. Determine if a mounting accessory, such as a recommended Deck Plate is needed. Refer to the installation instructions included with any mounting accessory and then complete the downrigger installation.

NOTICE: The Release Knob on the Swivel Base can face any direction for your final installation.

NOTICE: The Swivel Base can be purchased as an accessory for the Magnum 5 at cannondownriggers.com.

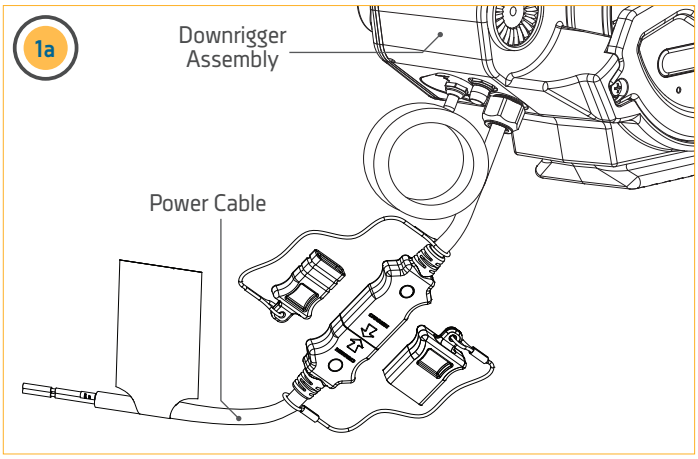

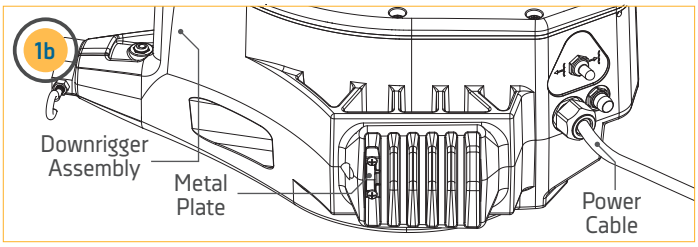

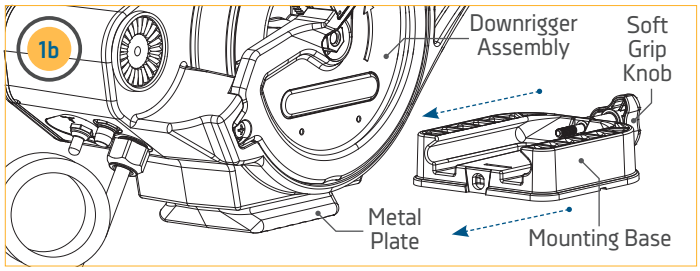

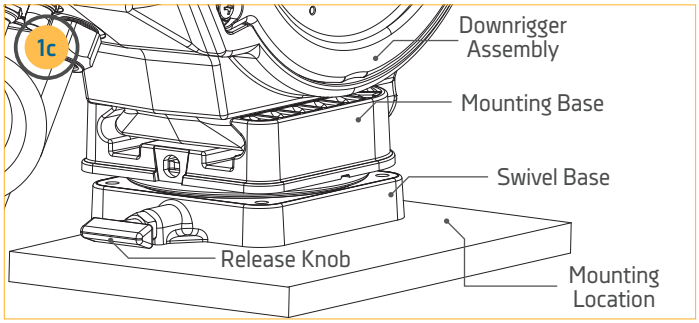

INSTALLING THE BASE

2

e. Once satisfied with the selected location, begin by using the Swivel Base or Mounting Base as a mounting template.

f. Take the Base and place it at the desired location. Make sure that the Release Knob or Soft Grip Knob is orientated in the desired direction and the mounting location is clear to drill holes and can accommodate mounting hardware.

g. With the Base in place, use a pencil, marker, or similar marking tool to mark the location of the 4 mounting holes on the mounting location.

NOTICE: When drilling holes, it is helpful to first cover the surface with masking tape. This will help keep the boat surface unmarked and help with cleanup. Cover the surface and then mark the location to drill. Once the pilot holes are drilled remove the masking tape before continuing installation.

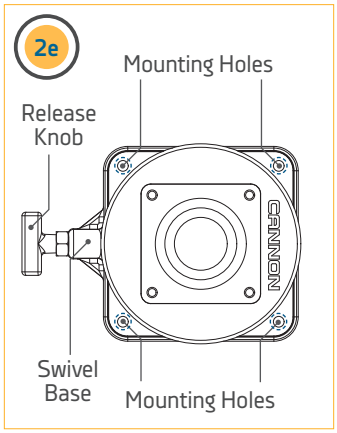

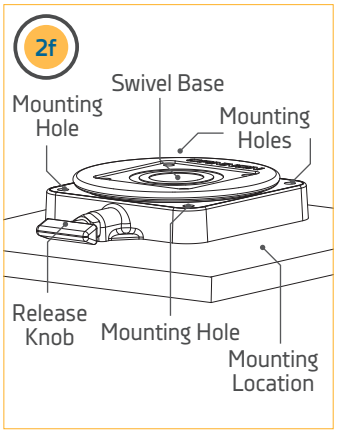

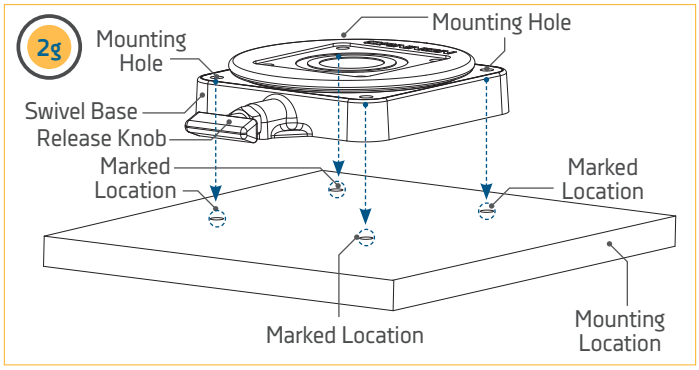

3

h. With the location marked, set the Base aside and drill holes, one in each of the four marked locations using a Drill with a 9/32" Drill Bit.

i. Return the Base to the mounting location and align it with the four drilled holes. Orientate it back in the desired direction so the mounting holes in the Base align with the drilled holes in the mounting location and the Release Knob or Soft Grip Knob in the desired direction.

NOTICE: Mounting the Swivel Base is optional. If it is preferred to use the Mounting Base only, use the Mounting Base as a template for drilling holes. To secure the Mounting Base to the deck use four 1/4-20 X 2" Phillips Truss Head Machine Screws (Item # 2) four Flat Washers (Item #4) and four 1/4-20 Nylock Nuts (Item # 6).

NOTICE: If only installing the Mounting Base and the Swivel Base was either not used or not inculded with your downrigger, continue to Step 6.

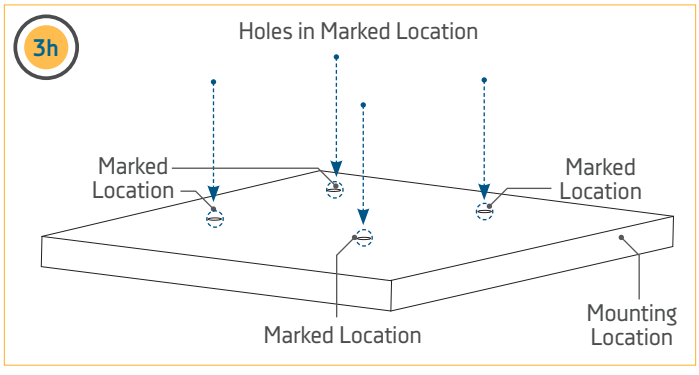

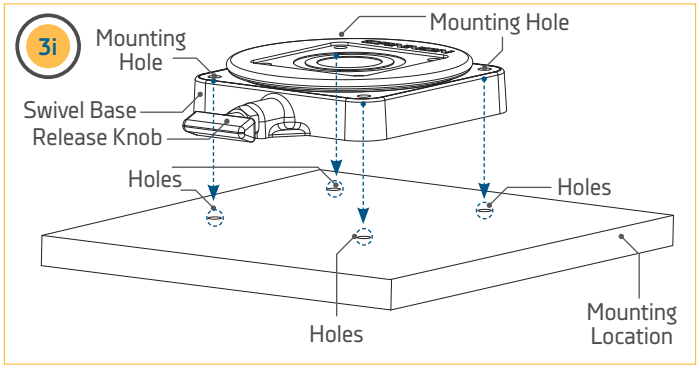

© 2020 | Johnson Outdoors Marine Electronics, Inc. | cannondownriggers.com

4

Item(s) needed:

#2 x 4 ◎ #4 x 4 ◎ #6 x 4

j. Take four of the 1/4-20 X 2" Phillips Truss Head Machine Screws (Item # 2) and apply anti-seize. Then place one in each of the Mounting Holes. The Truss Screws should pass through the Swivel Base and the drilled holes in the mounting location.

k. Secure the Truss Screws in place with four Flat Washers (Item #4) and four 1/4-20 Nylock Nuts (Item # 6). Take one Flat Washer and place it on the end of each Truss Screw. Secure each Truss Screw and Flat Washer with Nylock Nuts using a #3 Phillips Screwdriver. Hand tighten, or tighten to 45 ft-lbs. To prevent seizing of the stainless steel hardware, do not use high speed installation tools.

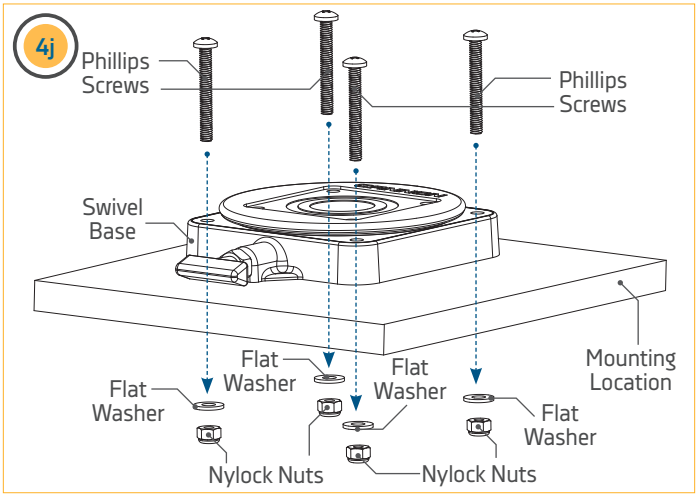

NOTICE: To prevent seizing of the stainless steel hardware, do not use high speed installation tools. Wetting the screws or applying an anti-seize may help prevent seizing.

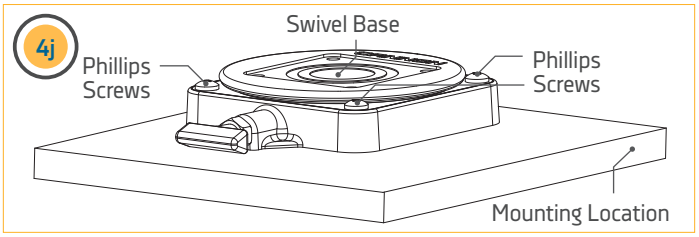

NOTICE: Consider installing an optional Cannon Lock on the Mounting Base for added security. *(Item No. 1903020)*

5

Item(s) needed:

#8 x 4

l. The Mounting Base will be installed to the Swivel Base. At the beginning of the installation, the Mounting Base was attached to the Downrigger Assembly. Recall the orientation of the Soft Grip Knob and the orientation of the Downrigger Assembly in its intended installation position.

m. Remove the Mounting Base from the Downrigger Assembly and place it back on the Swivel Base in the same orientation. The mounting holes in the corners of both the Swivel Base and Mounting Base should align. Take four of the 1/4-20 X 1 1/2" Truss Head Screws (Item # 8) and use them to secure the Mounting Base to the Swivel Base using a Phillips screwdriver.

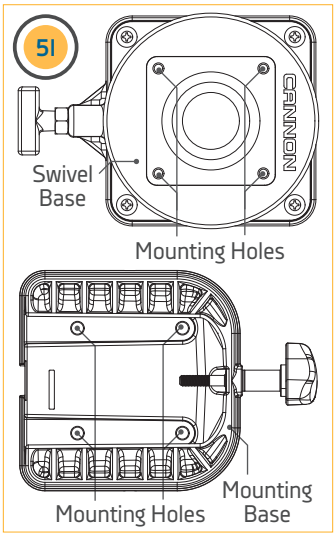

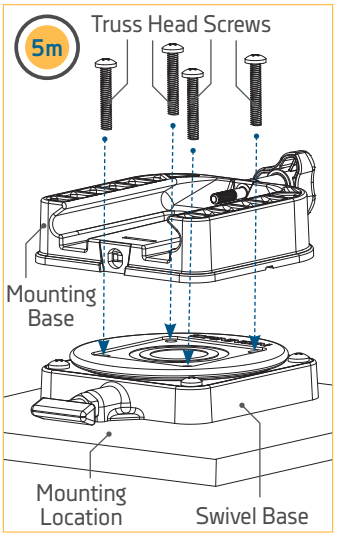

INSTALLING THE CLUTCH KNOB

6

n. Once the Base(s) are secured together, replace the Downrigger Assembly on the Mounting Base and secure it with the Soft Grip Knob. Hand tighten.

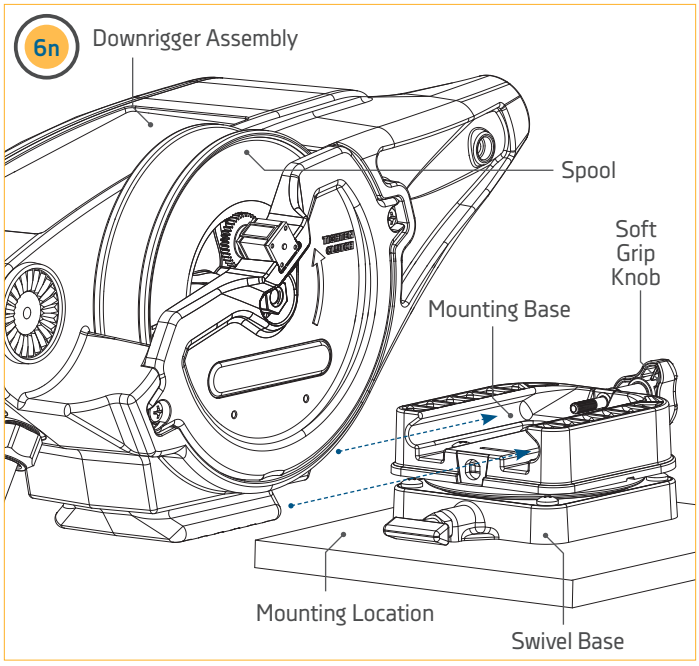

INSTALLING THE CLUTCH KNOB

1

Item(s) needed:

 #10 x 1

a. Take the Clutch Knob (Item #10) and install it into the side of the Downrigger Assembly. The Clutch Knob is installed on the side of the downrigger where the Spool is located. When installing the Clutch Knob, insert it into the center of the downrigger spool and turn it counterclockwise to tighten.

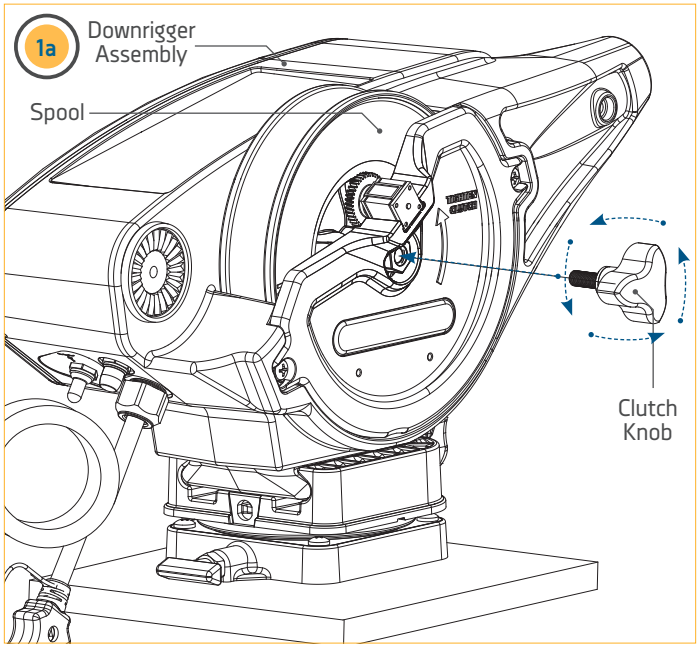

© 2020 | Johnson Outdoors Marine Electronics, Inc. | cannondownriggers.com

INSTALLING THE BOOM OR TELESCOPIC BOOM

1

Item(s) needed:

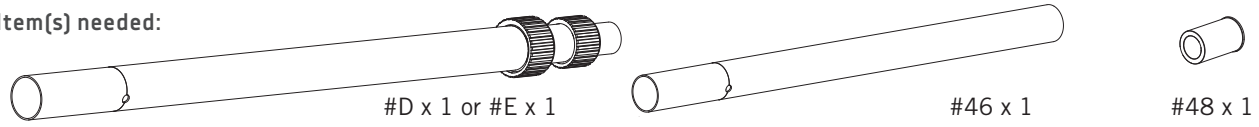

a. For the Magnum 5 downrigger, take the Boom (Item #46) and identify both ends. The end of the Boom with the screw hole closest to the edge will be placed the furthest from the Downrigger Assembly. Take the Boom Adapter (Item #48) and insert it into the far end of the Boom. This will be secured later.

b. For the Magnum 10 or Magnum 10 TS downrigger, take the Telescopic Boom (Assembly #D or Assembly #E) and cut the Cable Tie holding the three tubes of the boom together with a wire cutter or cutting tool. Remove the cut Cable Tie and loosen the Boom Clamps by turning them counterclockwise at the narrow end of the Telescopic Boom.

c. The Outer Tube that makes up the wider end of the Telescopic Boom has 3 holes used for mounting it to the Downrigger Assembly. The tubes in the Telescopic Boom need to be extended so that the holes used to mount the boom to the downrigger are unobstructed and are free to pass a bolt through.

d. With the Clamps on the Telescopic Boom loosened, the tubes of the boom can slide apart. Slide the Center Tube about 2 inches out from the original position and then re-tighten the Boom Clamp towards the narrower end of the boom turning clockwise. Slide the Middle Tube about 2 inches out from its original position and tighten the second clamp. Check the opposite end of the boom to see if all three holes on the Outer Tube are clear to pass mounting hardware. If not, re-adjust the Boom Clamps and tubes to expose the mounting holes. Secure the clamps by turning them clockwise so that the tubes do not slide, then set aside.

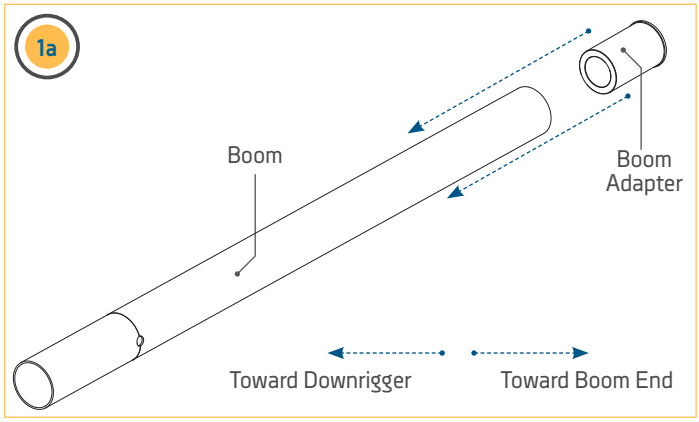

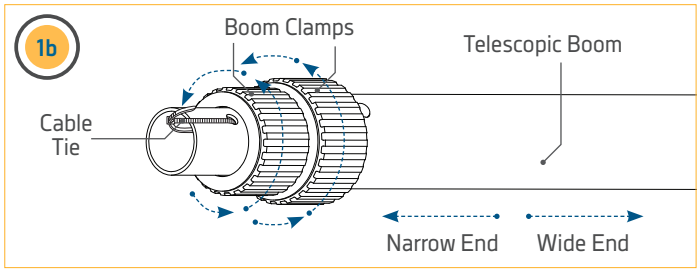

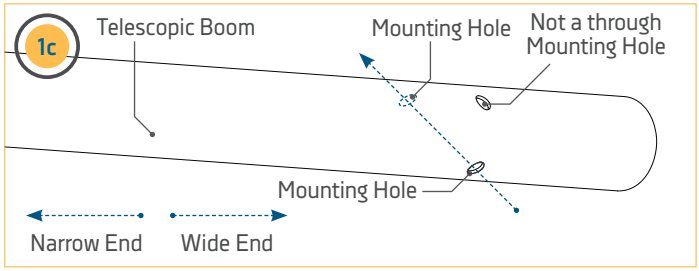

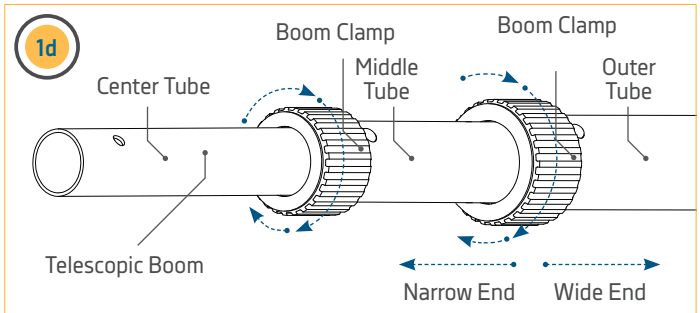

© 2020 | Johnson Outdoors Marine Electronics, Inc. | cannondownriggers.com

INSTALLING THE BOOM OR TELESCOPIC BOOM

2

Item(s) needed:

#12 x 1 #14 x 1

e. Take the Ball Hook (Item #14) and place the Stainless Steel Hex Nut (Item #12) on it. Turn the Hex Nut far onto the Ball Hook, nearly to the end of the threads. Set the Ball Hook Assembly aside.

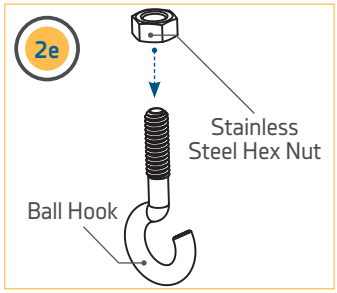

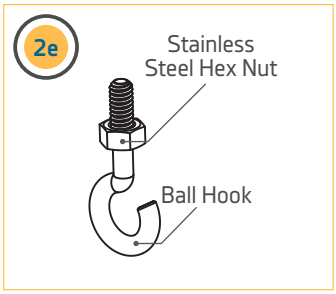

3

Item(s) needed:

#18 x 1

f. Take the Ball Hook Extrusion (Item #18) and place it over the wider end of the Telescopic Boom, opposite the Clamps or the downrigger side of the Boom. At this point in the installation, the Ball Hook Extrusion will slide freely on the Boom.

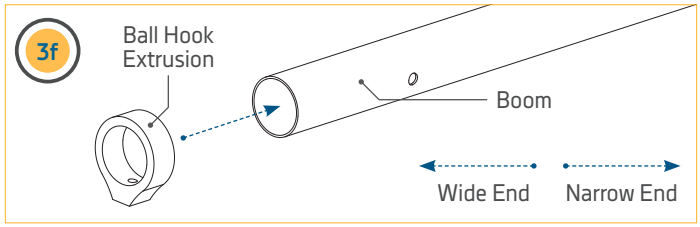

g. Take the Boom with the Ball Hook Extrusion and note the location of the three holes on the end of the boom. The two holes across from each other will be used to secure it to the Downrigger Assembly. The two holes are aligned so that hardware can pass straight through to secure it to the Downrigger Assembly. Place it into the end of the Downrigger Assembly and rotate the holes so that the mounting holes in the Boom Assembly are aligned with the mounting holes in the Downrigger Assembly.

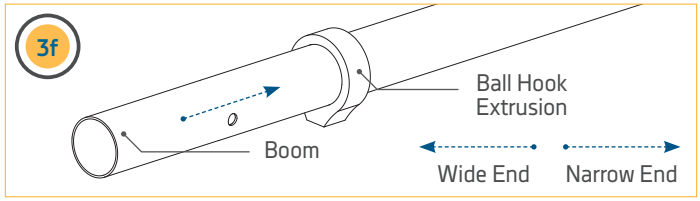

NOTICE: For Telescopic Booms, if preferred, rotate the Boom Assembly so that the plastic protrusion toward the Narrow End of the boom, next to the Boom Clamp, is rotated downward. This is a cosmetic preference and will not affect the operation of the Boom.

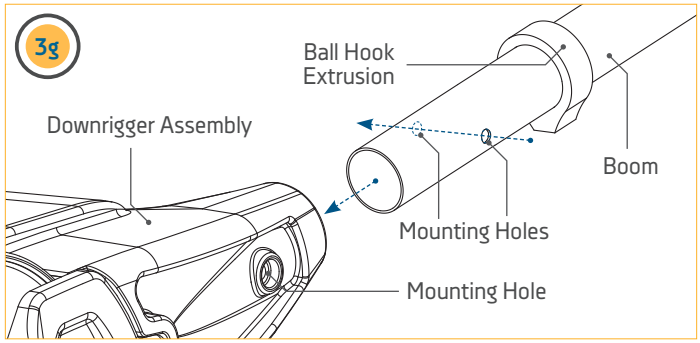

© 2020 | Johnson Outdoors Marine Electronics, Inc. | cannondownriggers.com

4

Item(s) needed:

#6 x 1

h. The Boom will be held in place with a Screw and Nylock Nut. On the back side of the Downrigger Assembly, on the Motor Side, is a keyed impression for the Nylock Nut. Take the Nylock Nut (Item #6) and press it into the Motor Side of the downrigger, opposite of the Spool Side. The Nylock Nut should be pressed in with the Curved Edge of the Nylock Nut facing outward.

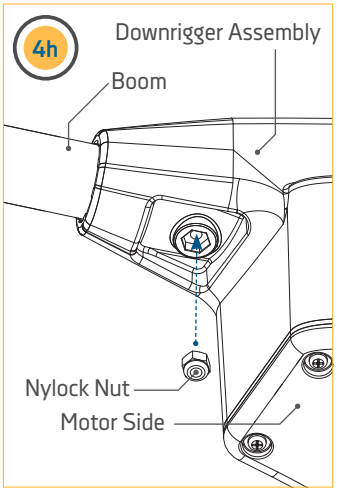

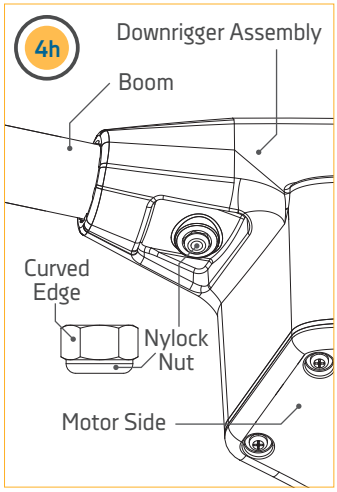

5

Item(s) needed:

#16 x 1

i. The 1/4-20 X 2" Phillips Pan Head Screw (Item #16) will be used to secure the Boom to the Downrigger Assembly. The Phillips Pan Head Screw will pass from the spool side of the downrigger to the opposite side of the Downrigger Assembly and through the Boom. On the Motor Side of the Downrigger Assembly the Phillips Pan Head Screw will be secured into the Nylock Nut installed above. Tighten the Phillips Pan Head Screw with a Phillips screwdriver until the end of the bolt is flush with the top of the Nylock Nut on the reverse side of the downrigger.

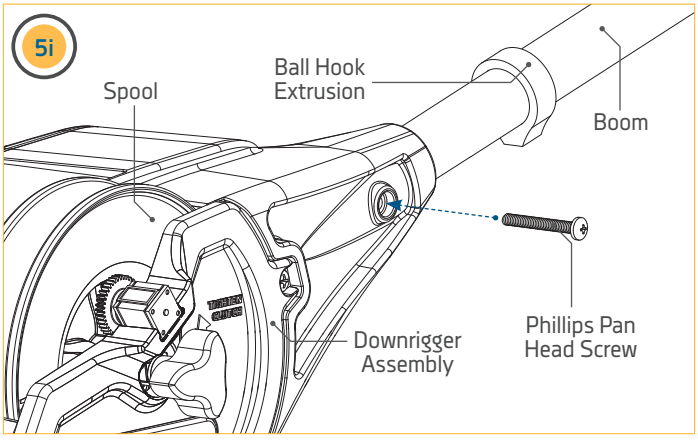

INSTALLING THE BOOM OR TELESCOPIC BOOM

6

j. With the Boom secured to the Downrigger Assembly, slide the Ball Hook Extrusion down on the Boom until it is seated against the Downrigger Assembly. Rotate the Ball Hook Extrusion so that the Screw Hole is facing downward.

k. Attach the Ball Hook Assembly into the Ball Hook Extrusion and hand tighten it until the Ball Hook Assembly has tightly secured the Ball Hook Extrusion in place on the Boom. Turn the Ball Hook until the hook is in the desired orientation, turning clockwise.

NOTICE: Do not over-tighten the Ball Hook Assembly or denting of the Boom is possible.

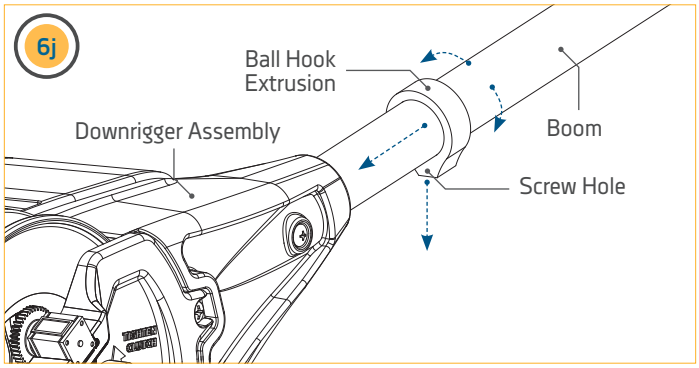

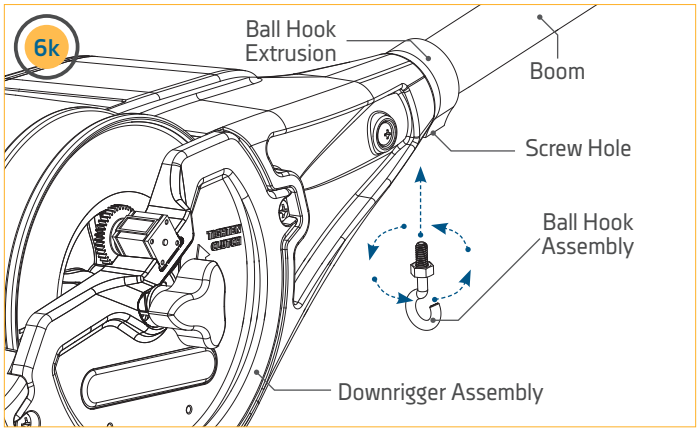

7

l. Secure the orientation of the Ball Hook by turning the Hex Nut on the Ball Hook Assembly until it is seated tightly against the Ball Hook Extrusion with a 7/16" wrench. Hand tighten until secure.

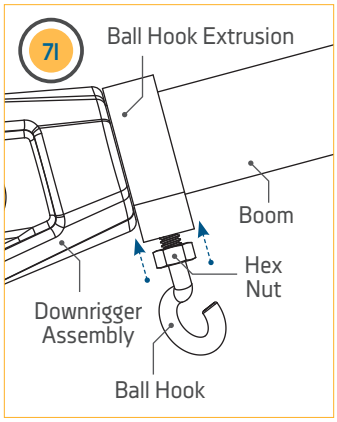

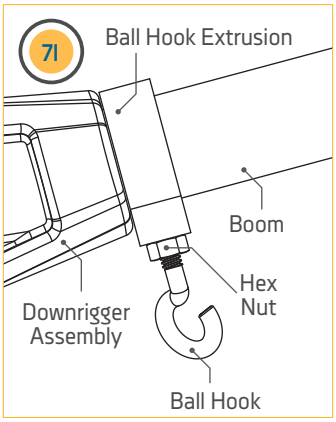

© 2020 | Johnson Outdoors Marine Electronics, Inc. | cannondownriggers.com

INSTALLING THE SWIVEL HEAD/BOOM END

1

Item(s) needed:

#28 x 1

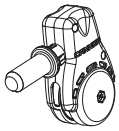

#38 x 1

a. Next install the Boom End (Item #38) on the end of the Boom. Take the Boom End and find the mounting hole along the shaft. For Magnum 5 downriggers, the Boom End will be inserted into the end of the Boom with the Boom Adapter. For Magnum 10 downriggers, the Boom End will go into the Narrow End of the Telescopic Boom. Make sure the holes in all pieces are aligned.

b. Once aligned, take the #8-18 X 5/8" Screw (Item #28) and insert it into the end of the Boom Assembly. Secure the screw with a Phillips Head screwdriver by turning clockwise.

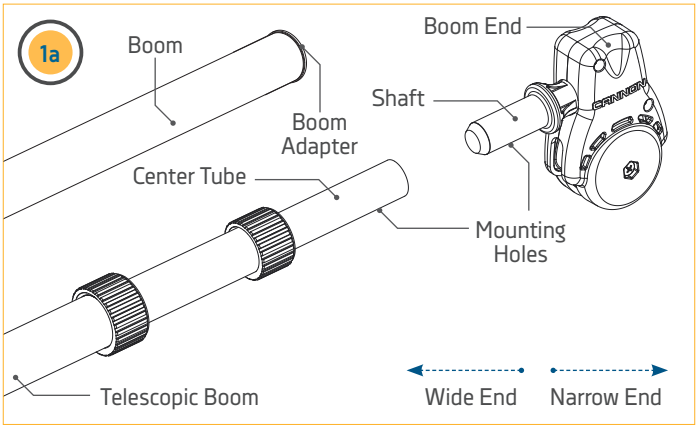

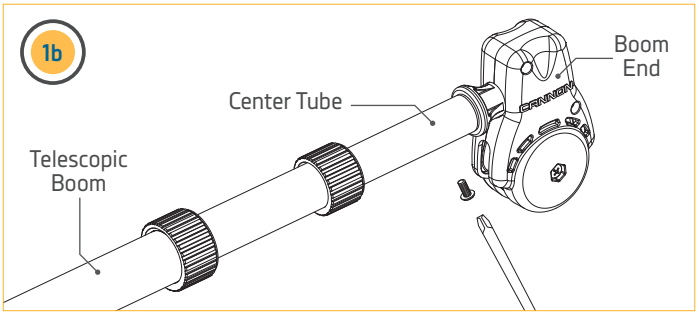

TERMINATING THE DOWNRIGGER LINE

With the body of the Cannon downrigger installed, the Line on the Spool can be terminated. The downrigger comes standard with stainless steel Line held in place on the Spool with a Rubber Band. During the termination, it is very important to keep tension on the Line to keep it wound tightly around the Spool. To keep tension on the Spool, the Clutch Knob is first installed and then the Line is routed and terminated. Check to determine that the Clutch Knob was installed by referring to the "Installing the Clutch Knob" section of these instructions. If installed, complete the terminating procedure by following these steps:

To watch a video of Terminating the Cannon Downrigger, follow the link on-line at https://www.youtube.com/watch?v=sQKp73j3aaw

NOTICE: It may be necessary to have a second person help with terminating the Line.

1

a. Locate the Rubber Band on the Line. The Rubber Band is securing both the end of the Line tight and holding the Line around the Spool. Keep the Rubber Band secured to the end of the Line, but loosen it from the Spool so that tension can be kept on the Line end by pulling on the Rubber Band. Once it is loose from the Spool, keep tension on the end of the Line by holding the Rubber Band tight.

b. The Line is wound around the Spool in a counterclockwise direction. Work with the end of the Line the Rubber Band is attached to, so that the end of the Line comes out of the downrigger on the bottom side of the Spool below the Telescopic Boom.

NOTICE: While terminating the Line, it is very important to keep tension on the Line to keep it wound tightly around the Spool.

c. Pull the Line tight by keeping it secure with the Rubber Band. Slide it through the Ball Hook Assembly.

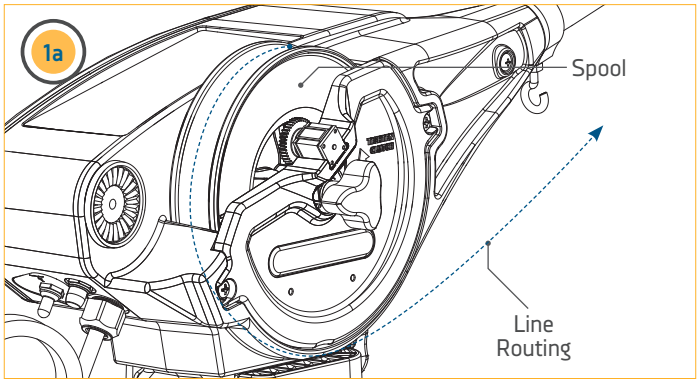

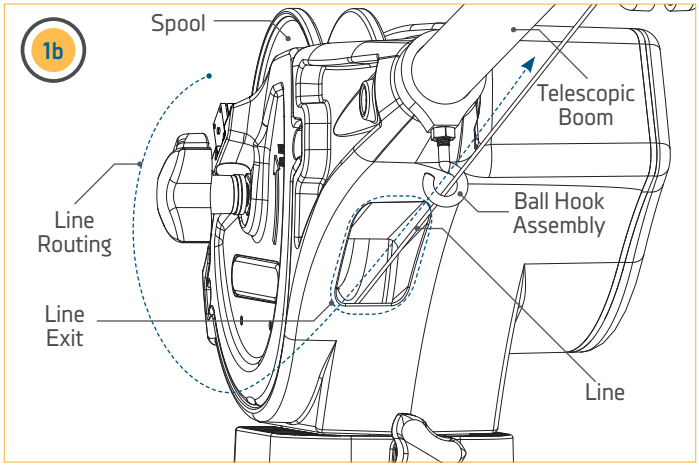

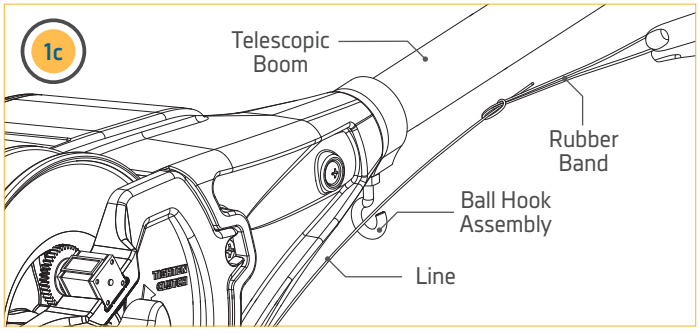

© 2020 | Johnson Outdoors Marine Electronics, Inc. | cannondownriggers.com

2

d. The Clutch Knob holds tension on the Spool. Loosen the Clutch Knob on the side of the downrigger by turning it clockwise while keeping tension on the Line. Pull the Line so that there is enough slack to feed the Line through the Pulley.

e. Feed the Line through the Pulley on the Boom End so that it exits the Pulley on the far end of the Pulley away from the base of the downrigger. Once it passes through the Pulley, pull approximately 2 feet of Line through the Pulley.

f. Re-tighten the Clutch Knob by turning it counterclockwise and keep tension on the Line.

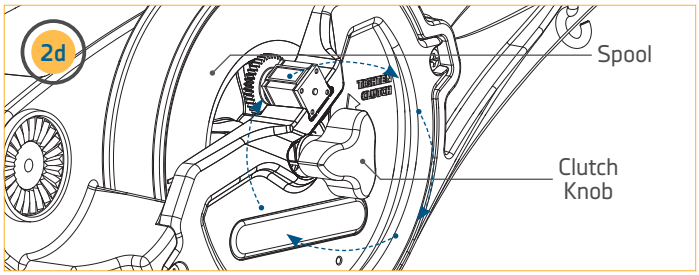

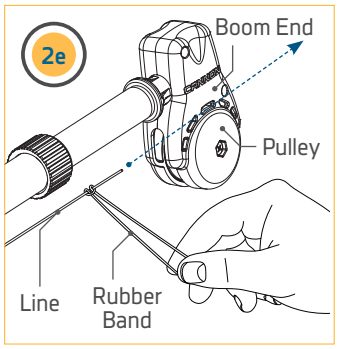

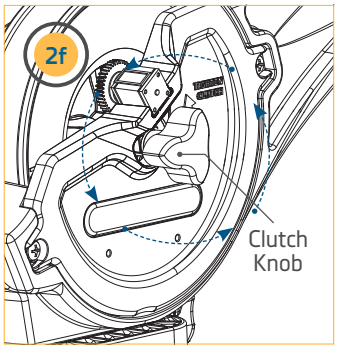

3

Item(s) needed:

#30 X 1

g. Have a second person hold the Line just past the downrigger Boom End to keep tension on the Line. Remove the Rubber Band from the end of the Line.

h. Take a wire cutter and remove any worn or kinked Line.

NOTICE: When routing Line through the Terminator, use only straight Line. Worn or kinked Line can be stressed and may break prematurely when retrieving trolling weights.

i. Take the Cushion Sleeve Terminator (Item #30) and feed the Line so that the narrower end of the sleeve is threaded first. Thread about a foot of Line through the Cushion Sleeve Terminator.

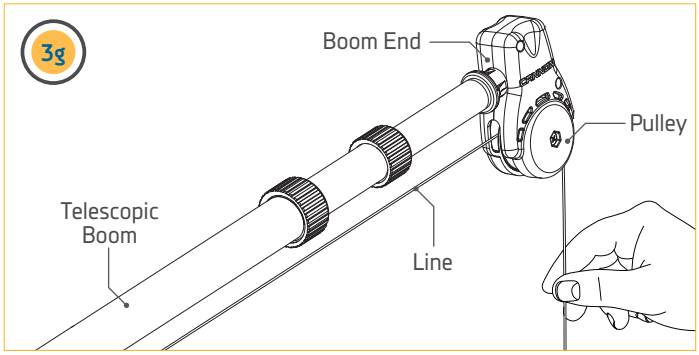

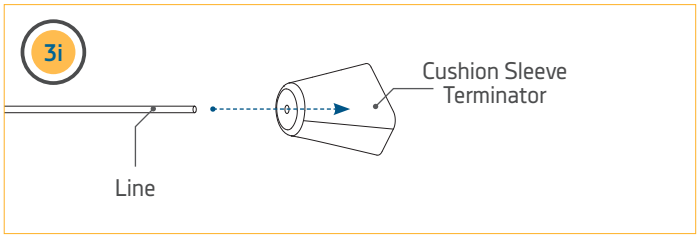

TERMINATING THE DOWNRIGGER LINE

4

Item(s) needed:

 #32 X 1  #36 X 1

j. Take the Snap Swivel (Item #36) and attach it to the hook at the bottom of the Cannon Terminator (Item #32). The Snap Swivel can be attached by inserting the end with the smaller metal loop onto the open end of the Bottom Hook on the Terminator. It may be helpful to use a pliers to link the pieces together.

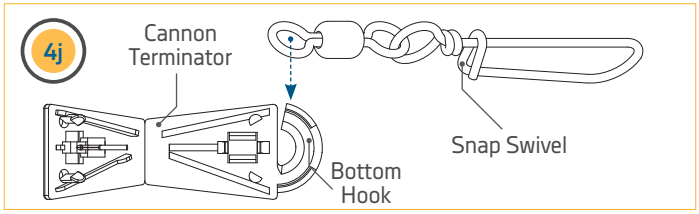

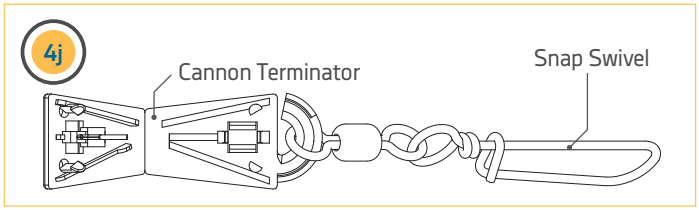

5

k. With the Snap Swivel attached to the Cannon Terminator, identify the front and back of the Terminator. Also look at the holes along the Top Fold and Bottom Hook of the Terminator. There are three holes along the Bottom Hook of the Terminator, one on each side of the hook and one in the middle. There are also 3 holes along the Top Fold all in close proximity to each other. The Line from the downrigger will be routed through the holes to terminate it.

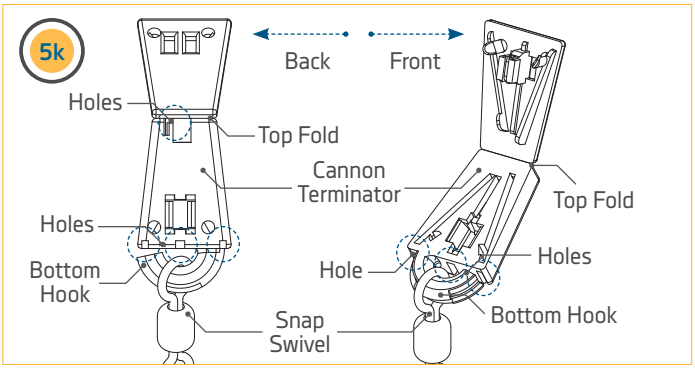

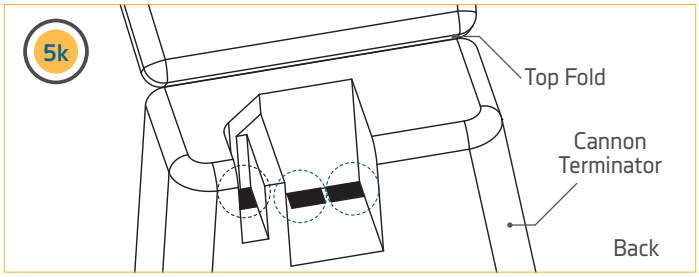

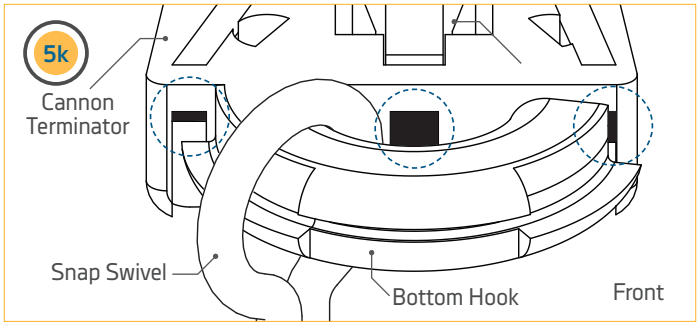

© 2020 | Johnson Outdoors Marine Electronics, Inc. | cannondownriggers.com

6

l. Turn the Terminator so that back side is facing toward you. The opening to the Bottom Hook should be on the left. With the Terminator in this orientation, place the freshly trimmed Line into the hole furthest to the right along the top hole so that the Line passes from the back of the Terminator through the hole to the front of the Terminator.

m. When the Cannon Terminator is turned over facing forward, the Line should follow the Track along the left side of the Terminator to the Bottom Hook. The Line should then be pulled to exit out the bottom along the closed side of the Bottom Hook. Pull about 6 inches of Line from the bottom of the Terminator.

n. With the Line exiting the bottom of the Terminator, slide the Line along the Bottom Hook so that is passes through the loop of the Snap Swivel linked on the Bottom Hook.

o. With the Line through the loop on the Snap Swivel, pass it along the Bottom Hook of the Terminator and insert it into the hole in the space at the far end of the Terminator where the Bottom Hook is detached from its base. Pull about 6 inches of the Line through the hole.

NOTICE: When routing the Line through the Terminator, there may be areas where there is slack in the Line. While routing the Line, it is okay for slack to be present. At the end of the termination process, the slack will be pulled tight. Be sure that the slack in the Line does not get kinked, to keep the Line easy to feed through the Terminator.

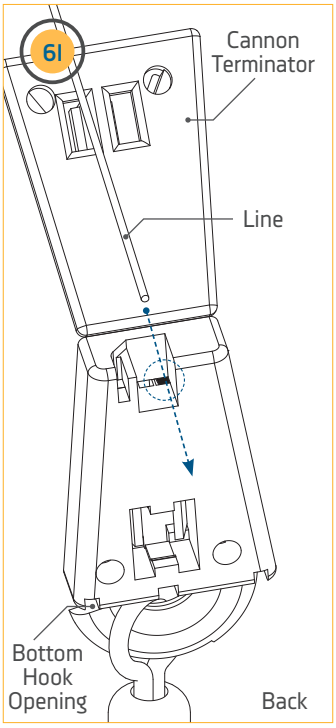

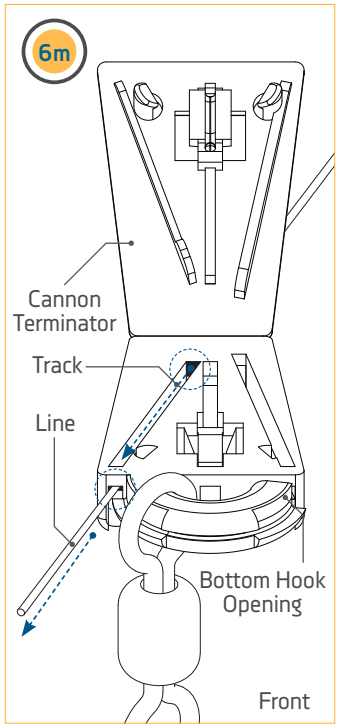

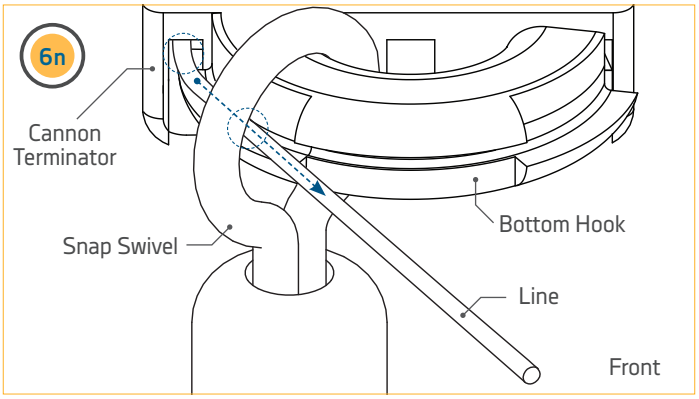

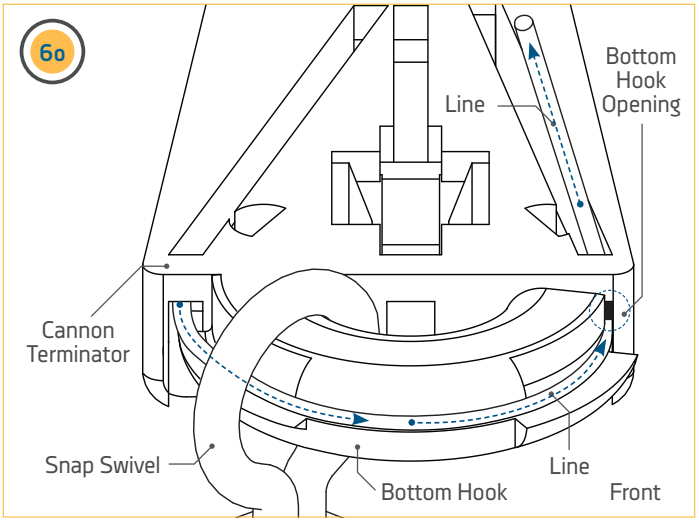

© 2020 | Johnson Outdoors Marine Electronics, Inc. | cannondownriggers.com

TERMINATING THE DOWNRIGGER LINE

7

p. With the front of the Cannon Terminator still facing toward you, take the Line and place it along the track along the right side of the Terminator and insert it so that it exits the hole at the far end of the track. The Line will exit the hole towards the back side of the Terminator.

q. Turn the Terminator over so the back side is facing toward you. Pull about 6 inches of slack through the Terminator.

r. Take the end of the Line and put it through the hole on the back of the Terminator right next to the hole that the Line was just fed out of. The hole is in the middle of the Terminator and is directly between the hole that the Line just exited and the very first hole that the Line was fed through on the Terminator.

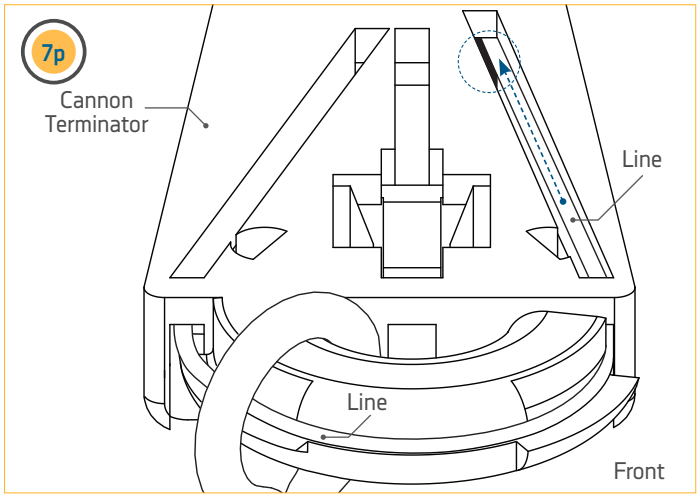

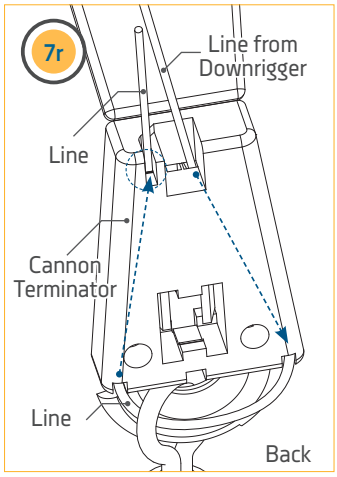

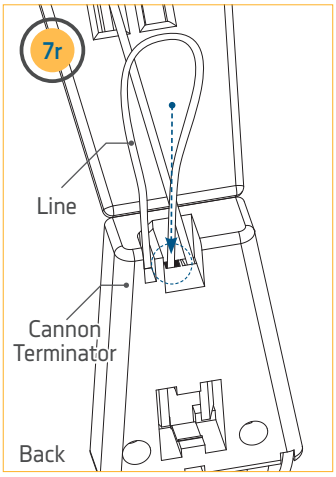

8

s. Turn the Terminator over so that the front of it is facing towards you. The end of the Line that was just inserted into the back of the Terminator should run along the track in the middle of the Terminator. Feed the Line all the way along this Track so that it exits the hole in the middle of the Terminator along the middle of the Bottom Hook at the end of the Track. The Line should stick out about 1/8 inch from the Terminator along the Bottom Hook.

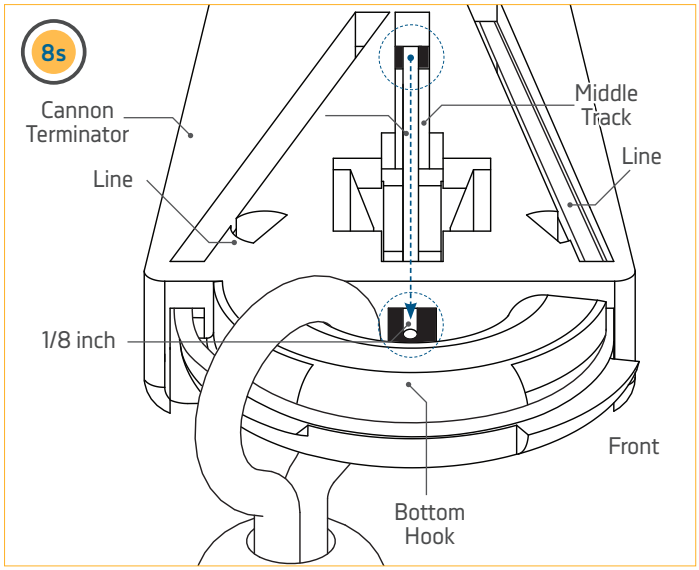

© 2020 | Johnson Outdoors Marine Electronics, Inc. | cannondownriggers.com

9

t. With the End of the Line sticking out the final hole by the Bottom Hook, hold the Terminator and squeeze the Line in the middle track to hold it in place. While keeping the end of the Line in place, pull the Line wound through the Terminator in the opposite direction, so that the slack is pulled tight. Use a pliers if necessary to get the Line tight.

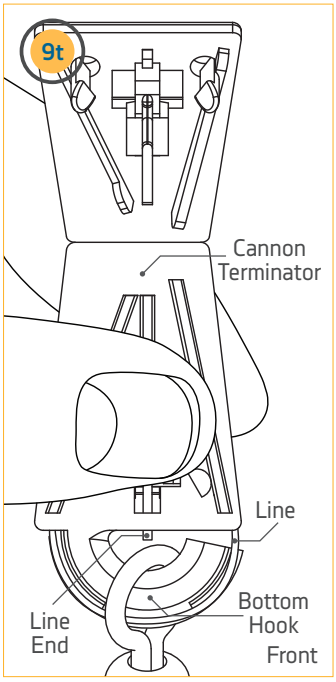

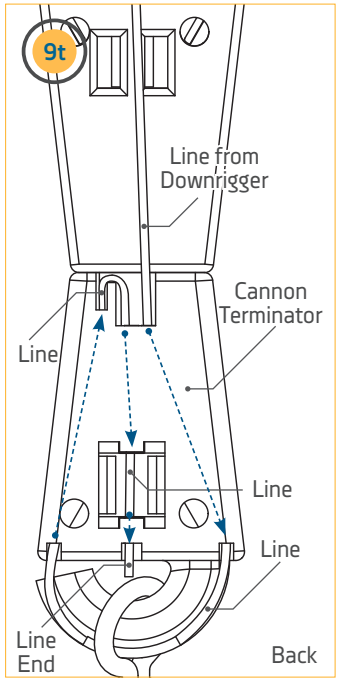

10

u. With the Line tight, close the Cover of the Terminator so that the Clip in the middle of the top cover captures the Line. Use a Pliers to close the Terminator if necessary. With the Terminator closed, Slide the Cushion Sleeve Terminator securely over the Terminator until it is seated against it. Once fully seated, the downrigger is successfully terminated. A Cannon Weight can then be attached directly to the Snap Swivel.

⚠ CAUTION

Do not overload the downrigger. It is designed to retrieve a maximum of 20 lb. weights only.

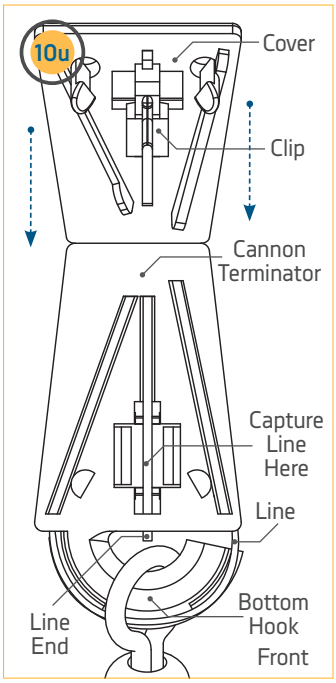

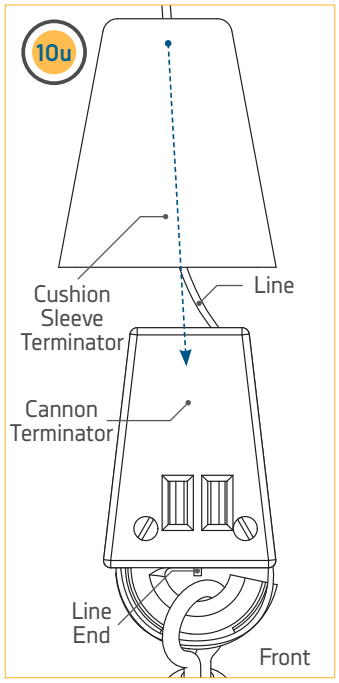

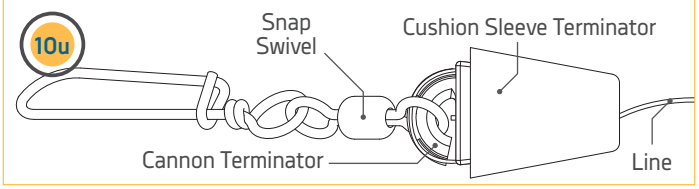

INSTALLING THE REAR MOUNT ROD HOLDER

The Cannon Magnum and Cannon Magnum TS downriggers come with one Rear Mount Rod Holder. The Rod Holder incorporates a two-piece locking tooth design. This allows independent adjustment of the Rod Holder along two axes, which can be easily adjusted every 15° of rotation. The symmetrical design will allow mounting of the Rod Holder on either side of the downrigger or two Rod Holders at the same time. The spring along the shaft of the Soft Grip Knob allows the knob to be loosened and the Rod Holder to be indexed without fully disassembling it. To install, follow the steps below.

NOTICE: The Rod Holder assembly is not covered under warranty when used with tackle above 30 lbs. Equipment placed in the Rod Holders and the loss thereof is the responsibility of the user and is in no way warranted by Johnson Outdoors, Inc. Mounting must be in accordance with the instructions to comply with the product warranty.

⚠ CAUTION

The Rod Holder is intended for use of up to 30lb test line only and is not recommended for use with any tackle IGFA (International Game Fish Association) rated higher than 30lb. A safety strap (not included) is recommended for all applications. The Rod Holder should not be used as a handle or a rest point.

1

Item(s) needed:

 #20 X 1 or 2

 #22 x 1 or 2

 #26 x 1 or 2

a. To secure the Rod Holder on the Downrigger Assembly, take one of the Soft Grip Knobs (Item #20) and one Spring Release (Item #22). Place one spring on the end of each Soft Grip Knob.

b. If the downrigger came with one Rod Holder, determine which side of the downrigger to install the Rod Holder on based on how your downrigger is mounted and how it will be used. Once the location of the Rod Holder is determined, take the Dual Axis Rod Holder Arm (Item #26) and turn it so that the short end of the elbow will be placed against the Downrigger Assembly. The face of the Dual Axis Rod Holder Arm that is installed on the downrigger contains keyed teeth which are matched on the Dual Axis Rod Holder Arm. These keyed teeth will help to hold the position of the knob and help to hold it in place when the position of the holder is changed during use. Secure the Dual Axis Rod Holder Arm with the Soft Grip Knob.

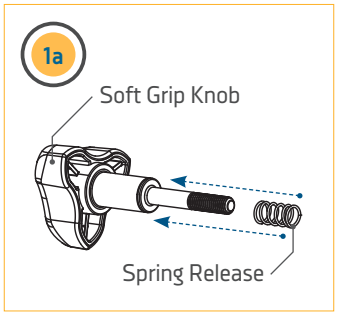

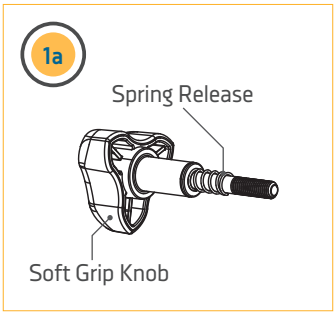

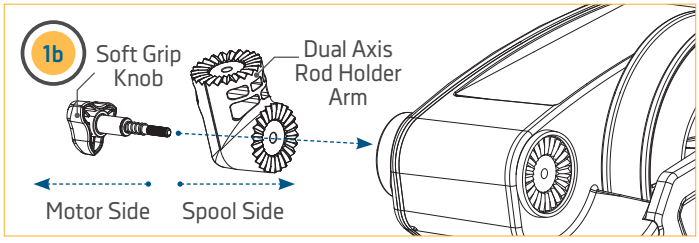

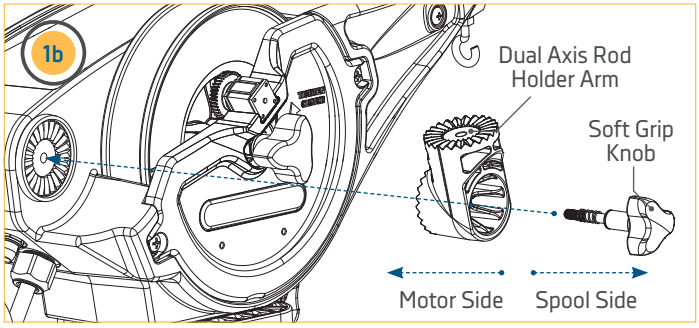

© 2020 | Johnson Outdoors Marine Electronics, Inc. | cannondownriggers.com

2

Item(s) needed:

 #20 X 1 or 2

 #22 x 1 or 2

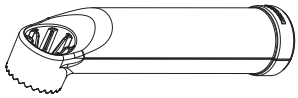 #34 X 1

#36 X 1

c. A Soft Grip Knob will be used to secure the Dual Axis Rod Holder Tube to the Arm just installed. Take one of the Soft Grip Knobs (Item #20) and one Spring Release (Item #22). Place one spring on the end of each Soft Grip Knob.

d. Take the Dual Axis Rod Holder Tube (Item #24) and turn it so that the short end of the piece will be placed against the Dual Axis Rod Holder Arm. The face of the Dual Axis Rod Holder Arm that contains keyed teeth which are matched on the Dual Axis Rod Holder Tube. These keyed teeth will help to hold the position of the knob and help to hold it in place when the position of the holder is changed during use. Secure the Dual Axis Rod Holder Tube with the Soft Grip Knob.

e. To adjust the direction of the Dual Axis Rod Holder Arm or tube, loosen the Soft Grip Knob and rotate in the desired direction. Then re-tighten the Soft Grip Knob to secure in place.

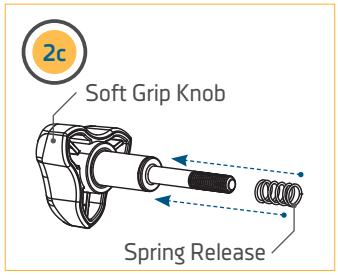

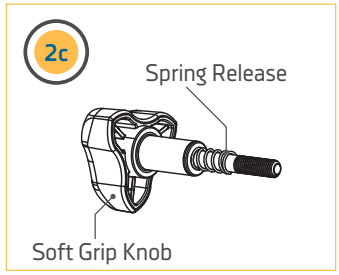

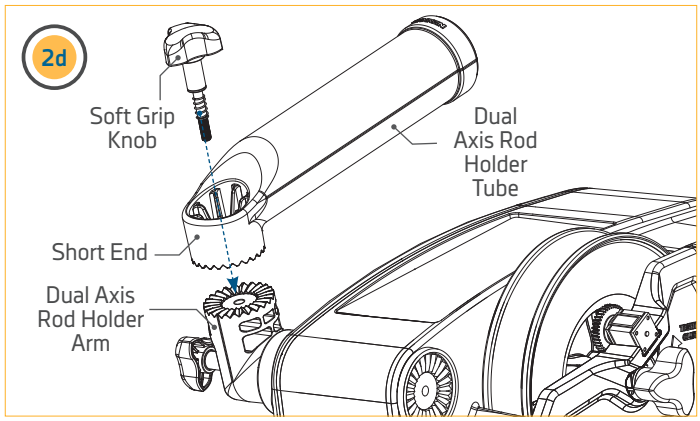

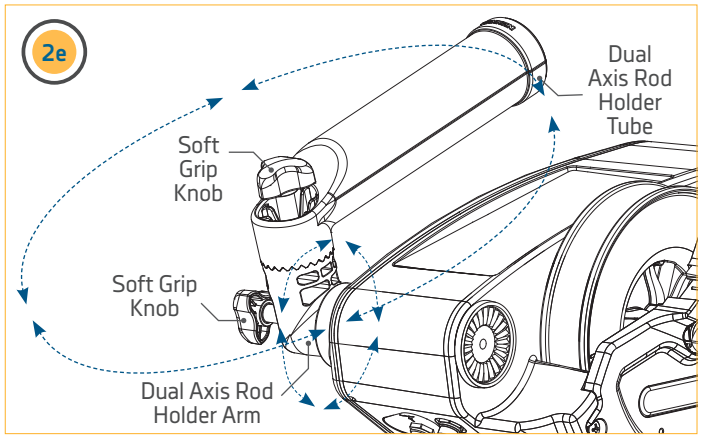

© 2020 | Johnson Outdoors Marine Electronics, Inc. | cannondownriggers.com

BATTERY & WIRING INSTALLATION

RIGGING & INSTALLATION GUIDELINES

For safety and compliance reasons, we recommend that you follow American Boat and Yacht Council (ABYC) standards when rigging your boat. Altering boat wiring should be completed by a qualified marine technician. The following specifications are for general guidelines only:

⚠ CAUTION

These guidelines apply to general rigging to support your Cannon product. Powering multiple downriggers or additional electrical devices from the same power circuit may impact the recommended conductor gauge and circuit breaker size. If you are using wire longer than that provided with your unit, follow the conductor gauge and circuit breaker sizing table below. If your wire extension length is more than 30 feet, we recommend that you contact a qualified marine technician.

⚠ CAUTION

Please read the following information before connecting your downrigger to a battery in order to avoid damaging your product and/or voiding your warranty.

CONDUCTOR GAUGE AND CIRCUIT BREAKER SIZING TABLE

This conductor and circuit breaker sizing table is only valid for the following assumptions:

1. No more than 2 conductors are bundled together inside of a sheath or conduit outside of engine spaces.
2. Each conductor has 105° C temp rated insulation.
3. No more than 5% voltage drop allowed at full motor power based on published product power requirements.

Fuse/Breaker Specifications	Wire Specifications		
	10 Gauge	8 Gauge	6 Gauge
30 Amp, 32 Volt, Waterproof, Fast Blow	0-10 feet	11-15 feet	16-20 feet
	0-3 meters	3-4.5 meters	4.5-6 meters

⚠ CAUTION

An over-current protection device (circuit breaker or fuse) must be used. Coast Guard requirements dictate that each ungrounded current-carrying conductor must be protected by a manually reset, trip-free circuit breaker or fuse. The type (voltage and current rating) of the fuse or circuit breaker must be sized accordingly to the Cannon downrigger used.

Reference - United States Code of Federal Regulations: 33 CFR 183 – Boats and Associated Equipment ABYC E-11: AC and DC Electrical Systems on Boats

© 2020 | Johnson Outdoors Marine Electronics, Inc. | cannondownriggers.com

RECOMMENDATIONS FOR MAINTAINING BOAT'S ELECTRICAL CONDITION

Whenever a boat is in water, various submerged parts interact to create weak electrical currents. These weak electrical currents should be controlled to extend the life of the boat's metal parts and ensure a good fish catching environment. In order for the Positive Ion Control and Short Stop (PIC) on your downrigger to work correctly, it is important to make sure your boat is properly set up before installing your downrigger. For full details on how the Positive Ion Control system works, see the "Positive Ion Control" section of the Owner's Manual.

NOTICE: To ensure proper operation of your downrigger, ground the downrigger battery to your boat's electrical system's ground. Always check to see if your boat is properly grounded first. Malfunctions with the Positive Ion Control, communication between units, or loss of operation result from faulty grounding.

- If the zinc sacrificial anodes on your boat and on the outboard/outdrive are more than half dissolved, it is recommended that they be replaced. Clean anodes on a regular basis with a non-corrosive brush.
- Any coating of slime or growth on the boat should be cleaned off.
- All metal parts including the hull (if metal) should be interconnected by a grounding wire. This includes motor shafts, outdrives, and through hull fittings. This will ensure that the boat is properly grounded to the water and allow Positive Ion Control and Short Stop to work correctly.
- The line on your downrigger should be replaced every 2 years. Etching of the line can weaken it physically and electrically.
- The use of Cannon coated weights and the snap assembly with the insulator will help insulate the weight from the positively charged line.

ELECTRICAL SPECIFICATIONS & WIRING INSTRUCTIONS

The downrigger is rated at 30 amps (full load), 12 volts DC and is protected by a 25 amp manual reset circuit breaker (located under motor housing). Be sure to measure the battery voltage of your boat.

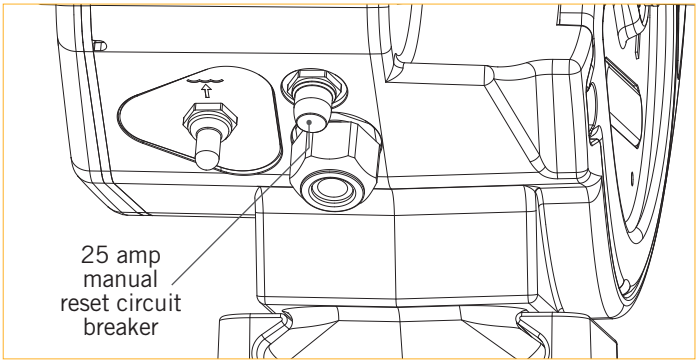

⚠ WARNING

Do not run this downrigger on a 24 volt or higher battery system. This will damage the unit and void your warranty. Only connect your downrigger to a 12 volt battery system.

⚠ WARNING

It is strongly recommended to power your downrigger with a battery capable of providing high currents for an extended period of time. Only run a downrigger from a Starter battery if it is recharged by an alternator while the downrigger is running.

⚠ WARNING

Never connect the (+) and the (–) terminals of the same battery together. Take care that no metal object can fall onto the battery and short the terminals. This would immediately lead to a short and extreme fire danger.

CONNECTING TO THE BATTERY

It is strongly recommended that a fuse or manual reset circuit breaker be installed within 7 inches from the battery on the positive lead of the power cable. In addition, you may also connect the downrigger to a battery selector switch. It is strongly recommended to power your downrigger with a Deep-Cycle marine battery. Only run a downrigger from a Starter battery if it is recharged by an alternator while the downrigger is running.

1. Make sure that the downrigger is powered "off" or the Quick Connect Plug on the downrigger Power Cable is disconnected.
2. Connect positive (+) red lead to positive (+) battery terminal.
3. Connect negative (–) black lead to negative (–) battery terminal.
4. Reconnect the Quick Connect Plug when ready to use the downrigger.

NOTICE: Control degradation of the power cables and limit corrosion by using anti-oxidant gel on all connections. Do not use wing nuts.

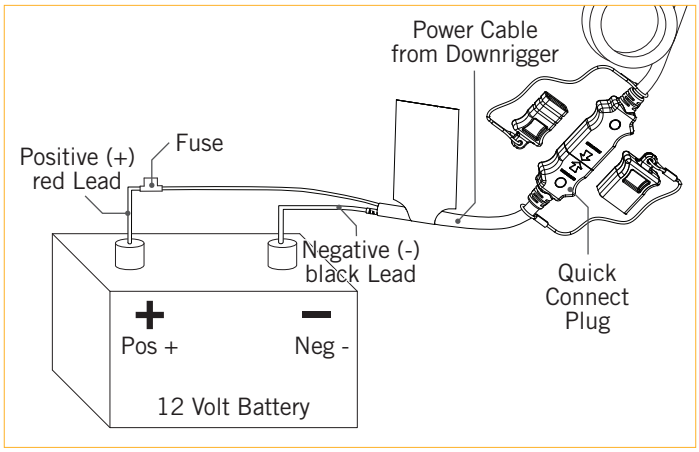

⚠ CAUTION

Refer to “Conductor Gauge and Circuit Breaker Sizing Table” in the previous section to find the appropriate circuit breaker or fuse for your downrigger.

⚠ WARNING

For safety reasons, disconnect the downrigger from the battery when the downrigger is not in use or while the battery/batteries are being charged. If installing a leadwire plug, observe proper polarity and follow instructions in your boat owner’s manual. Keep leadwire connections tight and solid to battery terminals. Locate battery in a ventilated compartment.

POWERING MULTIPLE DOWNRIGGERS

When operating multiple downriggers, run a maximum of 2 downriggers per dedicated 12 volt battery. Follow the instructions from the "Connecting to the Battery" section of these Installation Instructions. Repeat the directions for each downrigger.

NOTICE: Use the Quick Connect Plug to remove power from the downrigger without touching the battery.

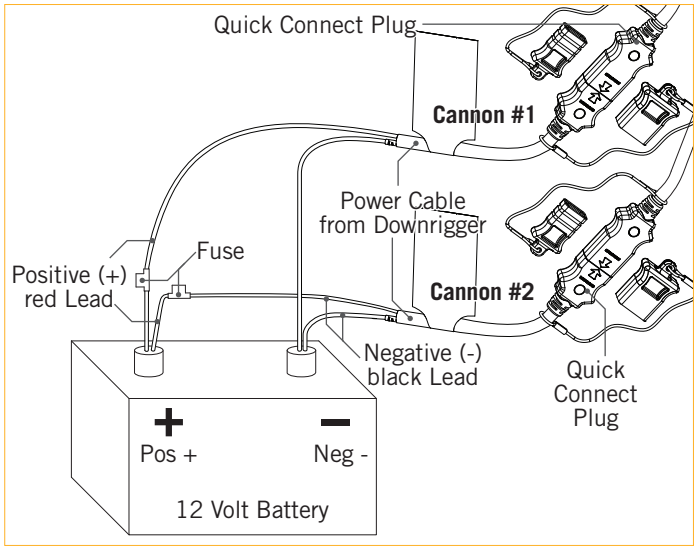

© 2020 | Johnson Outdoors Marine Electronics, Inc. | cannondownriggers.com

ADDITIONAL CONSIDERATIONS

ADDITIONAL ACCESSORIES CONNECTED TO DOWNRIGGER BATTERIES

Significant damage to your Cannon downrigger, your boat electronics, and your boat can occur if incorrect connections are made between your downrigger batteries and other battery systems. It is recommended to use an exclusive battery system for your downrigger. Where possible, accessories should be connected to a separate battery system. Radios and sonar units should not be connected to any downrigger battery systems as interference from the downrigger is unavoidable. If connecting any additional accessories to any downrigger battery system, or making connections between the downrigger batteries and other battery systems on the boat, be sure to carefully observe the information below.

The negative (-) connection of an accessory device must be connected to the negative terminal of the same battery that the downrigger negative lead connects to. Connecting to any other downrigger battery will input positive voltage into the "ground" of that accessory, which can cause excess corrosion. Any damage caused by incorrect connections between battery systems will not be covered under warranty.

AUTOMATIC JUMP START SYSTEMS AND SELECTOR SWITCHES

Automatic jump start systems and selector switches tie the negatives of the connected batteries together. Please see a qualified marine technician if installing your Cannon downrigger with one of these systems or a selector switch.

SELECTING THE CORRECT BATTERIES

The downrigger will operate with any lead acid deep cycle marine or Lithium 12 volt battery/batteries. For best results, use a deep cycle marine battery. Maintain battery at full charge. Proper care will ensure having battery power when you need it, and will significantly improve the battery life. Failure to recharge lead-acid batteries (within 12-24 hours) is the leading cause of premature battery failure. Use a multi-stage charger to avoid overcharging. We offer a wide selection of chargers to fit your charging needs. If you are using a crank battery to start a gasoline outboard, we recommend that you use a separate deep cycle marine battery/batteries for your Cannon downrigger.

WIRING DIAGRAM

MAGNUM & MAGNUM TS

The following Wiring Diagram applies to all Magnum and Magnum TS models.

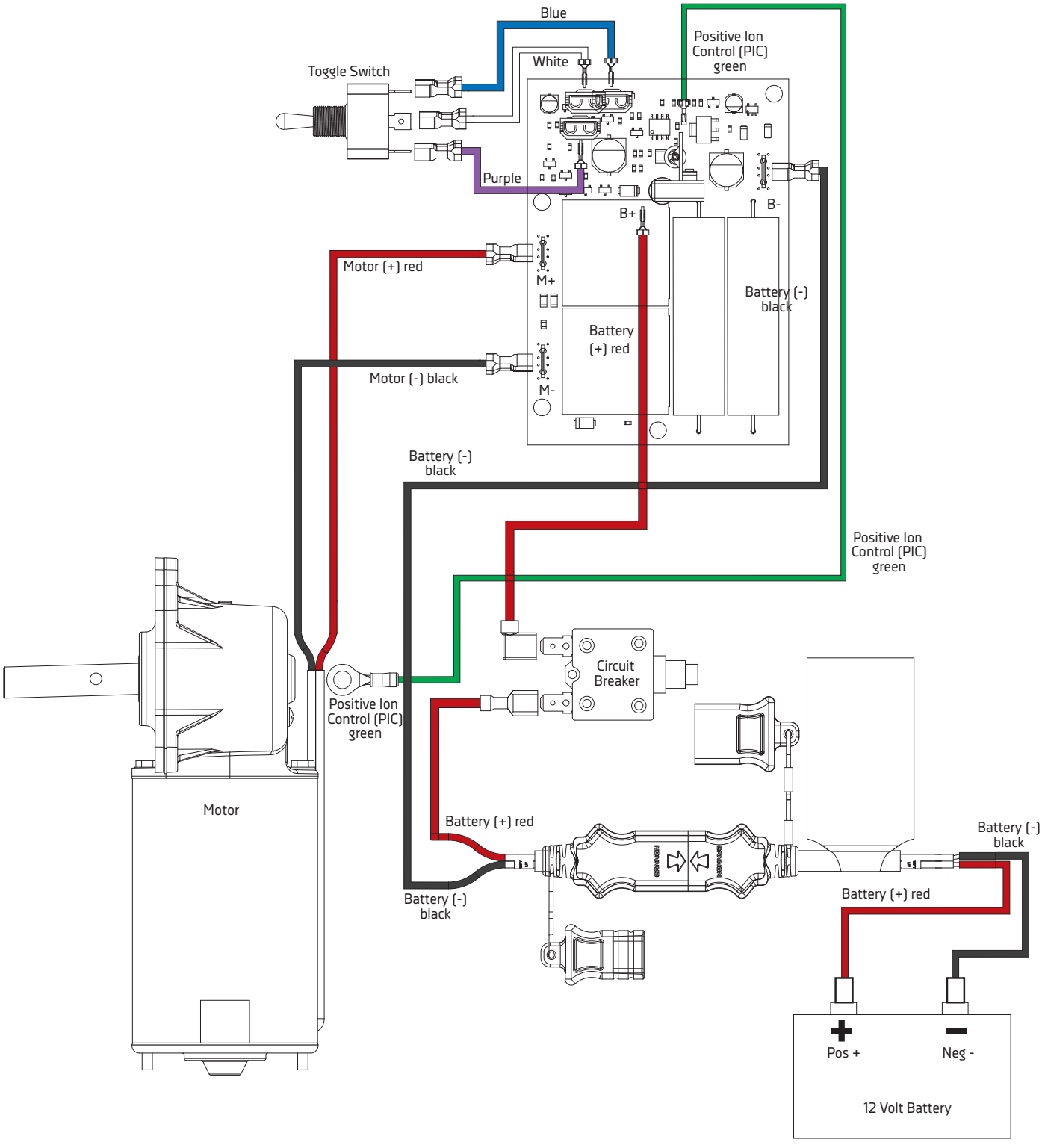

© 2020 | Johnson Outdoors Marine Electronics, Inc. | cannondownriggers.com

FISHING WITH THE DOWNRIGGER

DOWNRIGGER OPERATION

Become familiar with how to operate your downrigger for peak fishing performance.

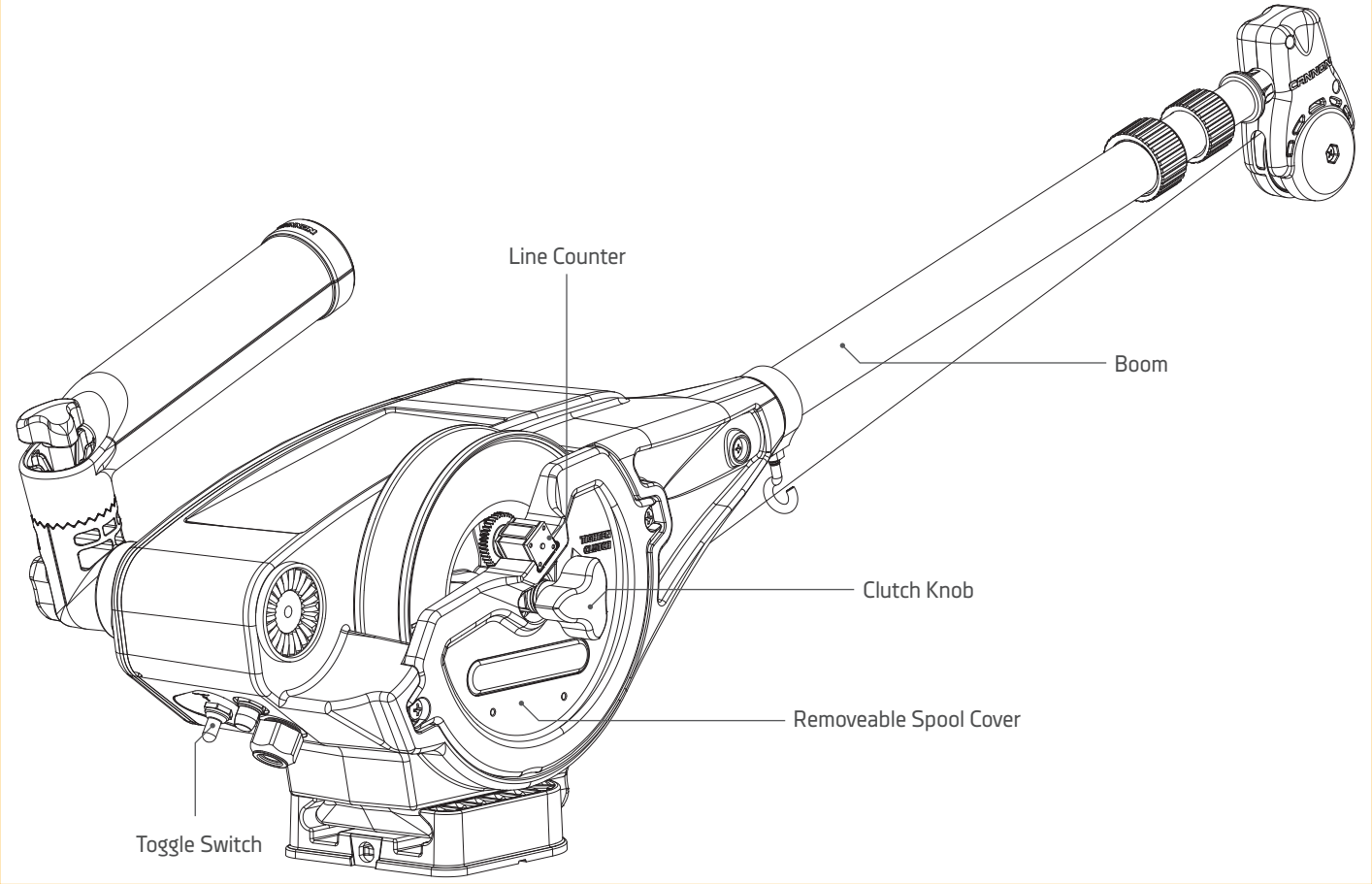

TOGGLE SWITCH - This controls the power to the downrigger when moving the Weight up and down.

LINE COUNTER - The Line Counter provides a reading of how much line has been released from the Spool. It also provides non-slip accurate resetting. To reset, just slide the Line Counter off the Removeable Spool Cover until the gears are disengaged. Spin the gauge settings to the desired number and then re-engage by sliding back into place.

LOWERING THE WEIGHT

MANUAL DESCENT - Fast or Slow - By turning the Clutch Knob gently clockwise (toward the Boom), you can allow your trolling Weight to descend as fast or slowly as you wish. Turning the Clutch Knob counter clockwise (away from the Boom) stops the weight. This gives you control to let it plunge rapidly or sink slowly to a predetermined trolling depth.

⚠ CAUTION

The Clutch Knob should be adjusted so that it is tight enough to hold the Weight and the lure at the speed you are trolling. Over-tightening may cause damage to your downrigger when weight drags across bottom structures and other obstacles.

POWERED DESCENT - One Speed Fits All - Hold the toggle switch down until the Weight reaches the desired depth and then release. The motor will stop when the Toggle Switch is release or moved to the off position.

RAISING THE WEIGHT - Push the Toggle Switch up momentarily and release. The Weight will rise until it reaches the surface and then automatically stop. If you want to raise the weight farther, push the Toggle Switch up and hold until the Weight reaches the desired position, then release. To stop the Weight during ascent, push the Toggle Switch down momentarily (approximately 1 second).

ATTACHING THE SNAP ASSEMBLY WITH INSULATOR

The Snap Assembly with Insulator is used to break any electrical connection between the downrigger and the water. This insulator is used with the Short Stop and Positive Ion Control features of the downrigger.

Short Stop is a Cannon exclusive feature that automatically stops the weight at the water's surface, preventing the lift motor from raising it into the pulley at the end of the boom. When the downrigger line is in the water, a small electrical current flows between the line and grounded metal boat components in the water. When the line clears the water, the current flow stops. The Short Stop system senses this interruption and turns off the motor. The trolling weight insulator is used to break the line contact to the water while the weight is still in the water. Stopping the weight at water level eliminates the line strain caused by a bouncing weight or a weight hitting the boom end and it also prevents the weight from swinging into the boat hull. This feature comes on all Cannon electric downriggers and requires the boat to be properly grounded and the use of an electrically conductive cable such as stainless steel. This feature will not work with mono or braided lines.

Positive Ion Control is a feature that is based on the principle that applying a low voltage positive electrical field into the water where you're fishing will attract fish and increase your chances to catch more fish. Since fish are attracted by a slight positive charge and repelled by a strong positive or negative charge, generating and controlling the correct charge can be critical to the success of your fishing. When PIC is turned on and the downrigger is spooled with line that can conduct an electrical current, the insulator helps to break the connection with the water so that the positive electrical field emitting from the downrigger line is broken.

1

Item(s) needed:



#34 x 1

a. Before attaching the Snap Assembly with Insulator, complete the "Terminating the Downrigger" section of these instructions. The properly terminated line can have a weight attached directly to it.

b. To begin, make sure that a weight is not attached to the Snap Swivel. Then take the Snap Assembly with Insulator (Item #34) and attach it to the Snap Swivel.

c. The Weight can then be attached to the Snap Assembly with Insulator.

NOTICE: In some cases it may be necessary to use two Snap Assembly with Insulators connected consecutively to break the electrical connection with the water.

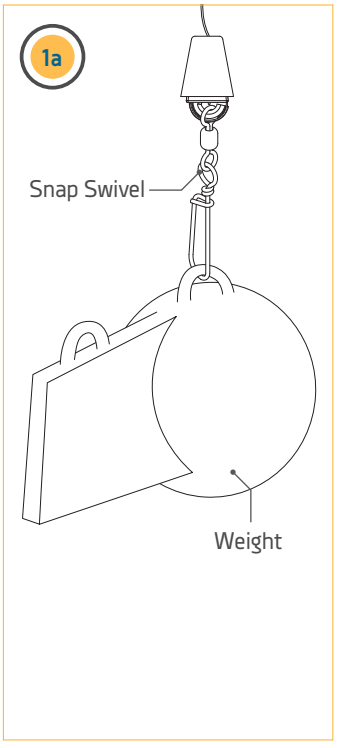

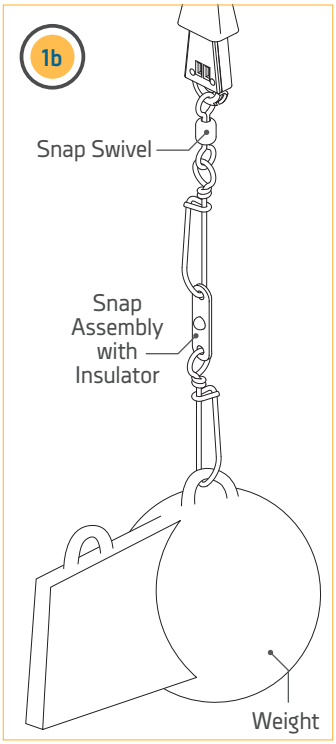

⚠ CAUTION

Do not overload the downrigger. It is designed to retrieve a maximum of 20 lb. weights only.

© 2020 | Johnson Outdoors Marine Electronics, Inc. | cannondownriggers.com

ATTACHING A LINE RELEASE

The last step in prepping the downrigger for fishing is to attach a Line Release. To attach the Line Release, first attach a Cannon Weight and then follow the steps below:

To watch a video on how to attach a Line Release, follow the link on-line at https://youtu.be/qpONbVgbbt8

1

Item(s) needed:

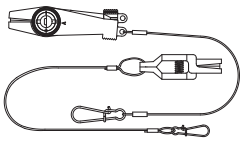

#U x 1 or #V x 1

a. Take the Release (Item #U or V) and attach the Snap Lock end of the Line Release to the Weight.

b. Release some line from the fishing rod and reel so that the lure is anywhere from 5 to 100 feet behind the boat. Determine a distance for the line from the fishing pole to drop back from the Weight and select a point for the line to be attached.

c. Twist a loop in the fishing line at the point that the line would be attached. Attach the line from the fishing rod firmly into the Clamp of the Line Release at the loop created in the fishing line.

d. Click through a series of increasing tension settings on the Clamp. The Line Release can be used with any test line on salt or fresh water and may be adjusted from 2 to 22 pounds of grip tension on the line.

e. Once the Line Release is attached to the fishing line, make sure the Fishing Rod is held securely or placed in a holder and open the reel so that line can draw out.

f. Then set the downrigger depth to lower the Weight to the desired depth in the water.

g. Once the downrigger Weight is at the desired depth, reel up the slack on the fishing line so that your fishing rod has a slight bend in it. When a fish strikes the lure, the line will separate from the Line Release. Then the fishing line will be free to fight the fish and bring it up on the rod and reel.

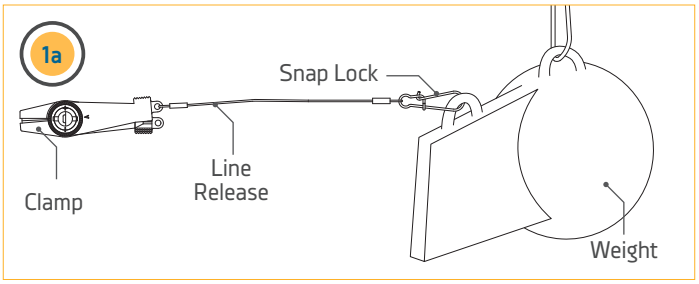

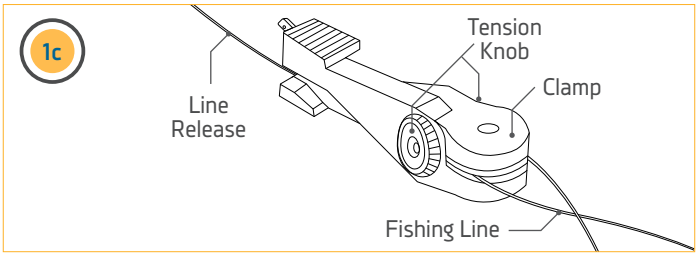

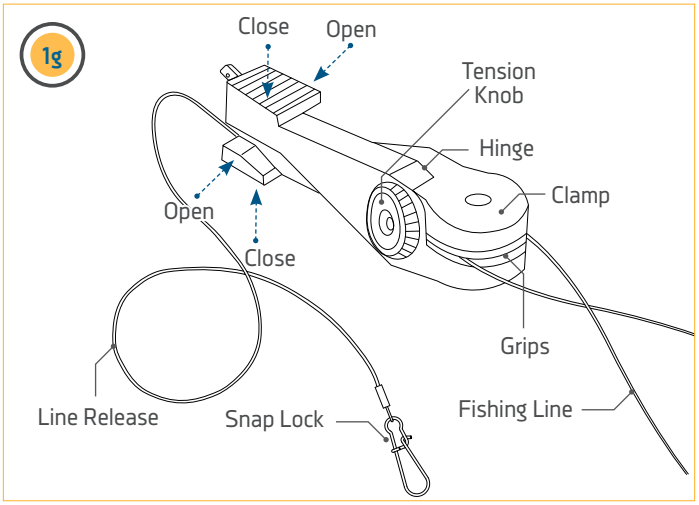

NOTICE: To change the Freshwater Line Release tension, turn the Tension Knob towards (+) to increase or (-) to decrease. Tension also may vary according to where the line is placed in the Grips of the Clamp. Higher tension is on the line if it is set back toward the Hinge, and lower if set closer to the opening. To open the Line Release, spread the Release Arms with thumb and forefinger applying pressure to the sides.

SAFE TRANSPORT

When done fishing with the downrigger it is recommended to store the downrigger and its parts securely for transport. Use common sense when transporting the downrigger and secure all loose or moving parts. Best practices include but are not limited to the following:

- Secure the Telescopic Boom so that the telescopic feature is adjusted to be as short as possible. See the "Adjusting the length of the Telescopic Boom" section of this manual for details.
- Pull the Release Knob, if the Swivel Base is installed, and rotate the Downrigger on the Swivel Base so that the Telescopic Boom is rotated Inboard on the boat.
- Make sure that the Release Knob is secured in place.
- Remove the Line Release and store in a secure location.
- Secure the Weight and Line on the Ball Hook or remove the Weight and place in a secure location and tighten the downrigger Line.
- Make sure any routed cables such as power cables are secured and routed in a way that they will not pose a tripping hazard.

Telescopic Boom

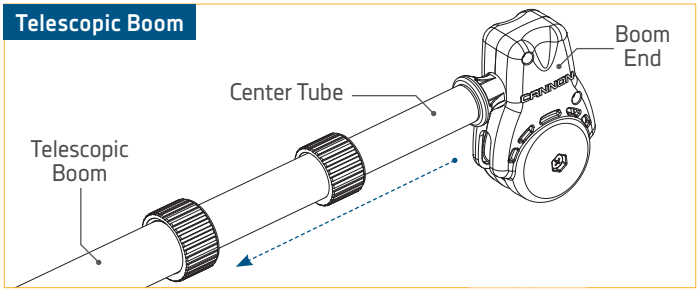

Inboard

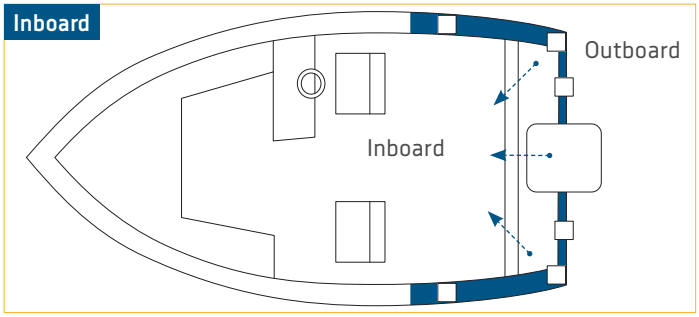

Line Release

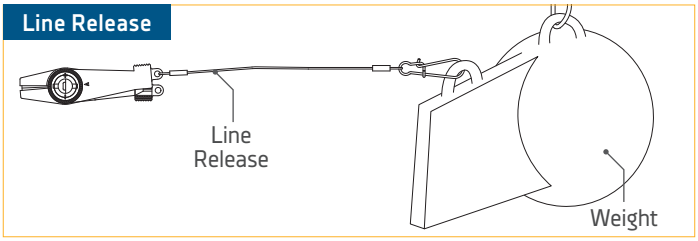

Release Knob

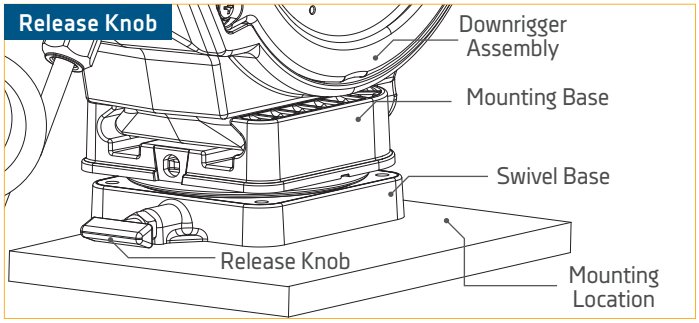

Cables

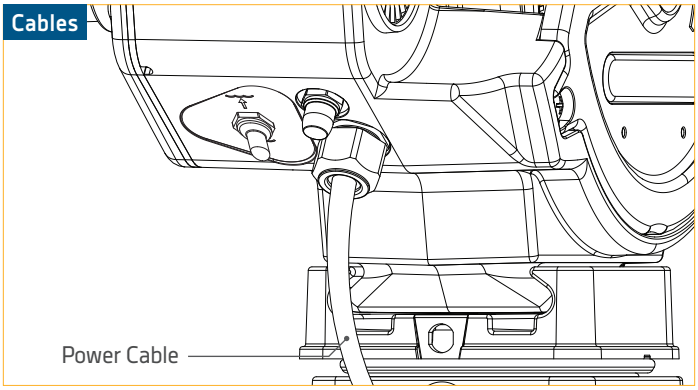

Ball Hook

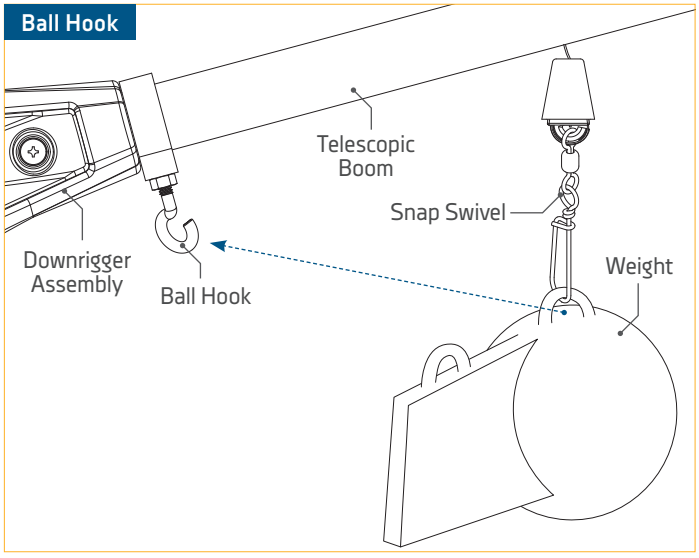

© 2020 | Johnson Outdoors Marine Electronics, Inc. | cannondownriggers.com

USING THE DOWNRIGGER

CONTROLLING THE MAGNUM™ AND MAGNUM™ TS

Understanding the features the Magnum and Magnum TS provide to your fishing experience will greatly affect the benefit the downrigger provides. Become familiar with how to control the downrigger to control the product to enhance your fishing. This section of the manual will explain the following features:

- Positive Ion Control
- Short Stop

⚠ WARNING

Do not touch the Spool while the downrigger is in use.

POSITIVE ION CONTROL

Your boat has a natural electrical charge around the hull when it sits in the water. If a boat is properly grounded and has a proper zinc anode, that charge should be slightly positive when measured from the motor or lead ground to the downrigger line. Because of the composite construction of the Magnum and Magnum TS downrigger frame, the downrigger is insulated from your boat's hull charge. The downrigger line will only conduct a charge when it is stainless steel and will not hold a charge when the line is mono-filament or braided. When a stainless steel downrigger line is lowered into the water, the natural ionization between the line and the boat creates a positive charge of 0.7 to 0.9 volts in saltwater and 0.3 to 0.6 volts in fresh water. This natural voltage is dependent upon salinity and mineral content of the water and the actual voltage may vary. It will also only work correctly when the boat is properly grounded.

POSITIVE ION CONTROL

NOTICE: The Positive Ion Control system will only work with stainless steel Line and will not work when the Line is mono-filament or braided.

The practice of setting up and maintaining a slight positive charge on fishing gear has been used by commercial fishermen for many years and has enabled some fisherman to increase yield when used along with other good fishing and boating practices. Positive Ion Control (PIC) is the use of electricity to control the charge on the downrigger line and its fluctuation so that it is always maintained at a specified set voltage. Cannon's electric downriggers offer fishermen a big advantage in being able to stabilize and control the positive charge around their boat with the PIC system.

The Positive Ion Control system applies a charge between 0.6 and 0.8 volts DC on the downrigger line at all times. The PIC system applies the voltage to the downrigger line and not the fishing line from the fishing rod. The two lines are tied together while fishing with a downrigger by a Line Release. Positive Ion Control is very effective when trolling. A zone of attraction will be created by the downrigger line with PIC applied to attract fish. Placing the lure in the zone of attraction will allow the operator to use PIC to their advantage when fishing. The distance between the end of the fishing line where the lure is placed and the spot on the fishing line where the Line Release is secured is called the Drop Back. It is best to use a short Drop Back between the downrigger Line Release and the lure so that the electrical charge from the PIC circuit is close to the lure. Drop Backs of 10 to 20 ft. are typical. A Drop Back of 50 to 100 ft. will entirely negate the effects of the PIC circuit.

MEASURING THE ELECTRICAL POTENTIAL OF YOUR BOAT

A voltmeter with a scale of zero to one volts will measure the electrical potential of your boat.

1

a. Place the ground lead of the voltmeter on the motor or the battery ground.

b. Place the positive lead of the voltmeter on the stainless steel downrigger line while it is in the water. The downrigger must be unplugged.

c. The voltage measured on the volt meter is your boat's natural electrolysis voltage.

MEASURING THE PIC VOLTAGE ON YOUR BOAT

A voltmeter with a scale of zero to one volt will measure the PIC voltage on your downrigger line.

1

a. Place the ground lead of the voltmeter on the motor or the battery ground.

b. Place the positive lead of the voltmeter on the stainless steel downrigger line while it is in the water.

c. Apply power to the downrigger.

NOTICE: Volt Meter accuracy and distance of line (Stainless Steel) to the point the voltage is measured will affect the results.

SHORT STOP

Short Stop automatically stops the weight at the water's surface, preventing the lift motor from raising it into the Pulley at the end of the Boom. When the downrigger line is in the water, a small electrical current flows between the line and grounded metal boat components in the water. When the line clears the water, the current flow stops. The Short Stop system senses this interruption and turns off the motor. The Snap Assembly with Insulator is used to break the Line contact to the water while the Weight is still in the water. Stopping the Weight at water level eliminates the Line strain caused by a bouncing Weight or a Weight hitting the Boom End, and it also keeps the Weight from swinging into the boat hull. This feature requires the boat to be properly grounded.



NOTICE: Short Stop will only work with stainless steel Line and will not work when the Line is mono-filament or braided.

© 2020 | Johnson Outdoors Marine Electronics, Inc. | cannondownriggers.com

BLOWBACK CALCULATIONS

BLOWBACK

Blowback is created by the resistance of the water to the downrigger Weight and Line as you pull it through the water behind your boat. When the speed of the boat is increased the horizontal distance behind the boat also increases. This causes the Weight to move shallower, so more Line needs to be released from the spool to get back to your target depth.

The following charts provide you with approximate blowback information for three sizes of Cannon downrigger Weights pulled at three different speeds with no lures attached and with no current in the water. Water current, water current drag, water salinity and the use of non-Cannon products will affect your actual trolling depth and blowback.

As an example, the first chart shows that if you are trolling at 4 mph with an 8 pound weight and you have 100 feet of line in the water with no current; the downrigger Weight is actually at a depth of about 80 feet.

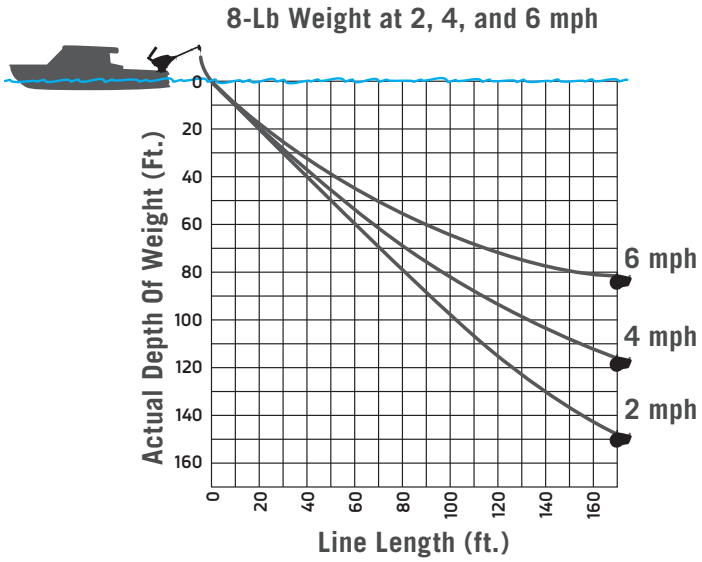

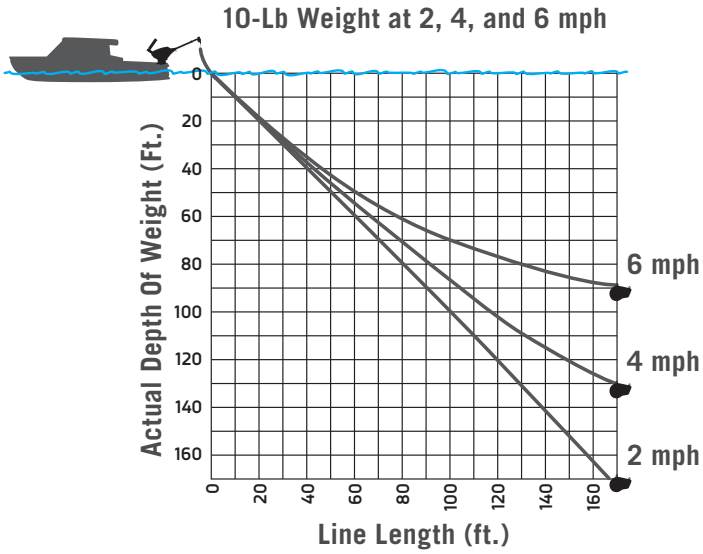

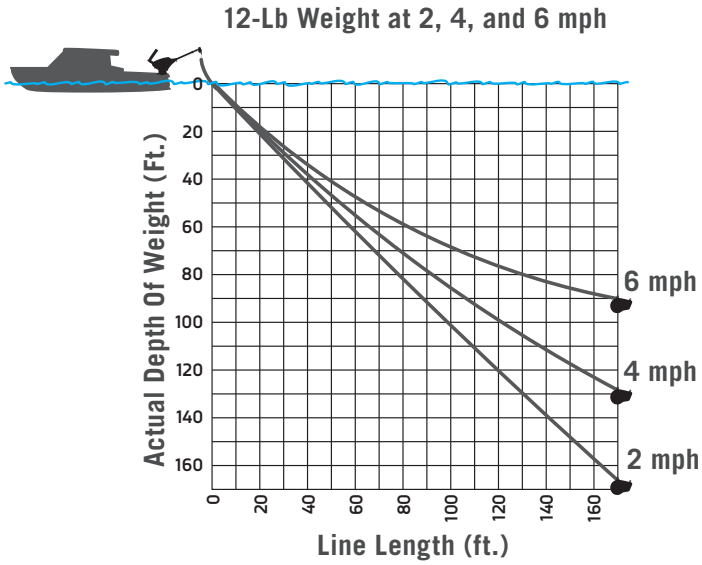

NOTICE: These tables are approximate and may be affected by water current, water current drag, water salinity, trolling depth and the use of non-Cannon products among other things.

SERVICE & MAINTENANCE

ATTACHING THE CRANK HANDLE ASSEMBLY

In case of a dead battery, your downrigger comes equipped with a power loss Manual Crank Handle. This handle allows for the retrieval of your Weight should you lose power or have an electrical failure. To utilize the handle follow the steps below.

1

a. Unplug the downrigger and make sure it is not connected to a power source. Then secure the Spool.

⚠ WARNING

Make sure the downrigger is not connected to a power source.

⚠ WARNING

Loosening or removing the Clutch Knob will release the Spool and allow it to run free. Make sure you secure the Spool before removing the Clutch Knob. It is recommended that you wear protective gloves and eye protection when working with the Spool.

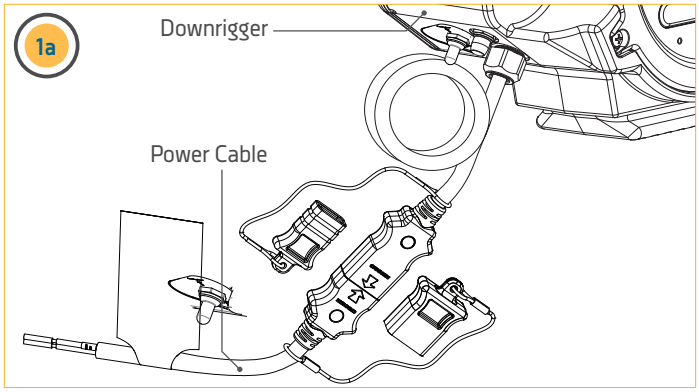

2

b. Locate the Clutch Knob on the Spool side of the downrigger.

c. Rotate the Clutch Knob clockwise to remove it from the downrigger.

NOTICE: Take care when removing the Clutch Knob over open water so you don't drop it into the water.

d. Take the Manual Crank Handle and install the handle's hex pattern to match the hex pattern on the Spool. Turn the Manual Crank Handle counterclockwise to install and tighten.

NOTICE: The Manual Crank Handle should be turned counterclockwise to install and tighten. This is also sometimes called left handed thread.

e. Once installed, turn the Manual Crank Handle counterclockwise to retrieve the Weight.

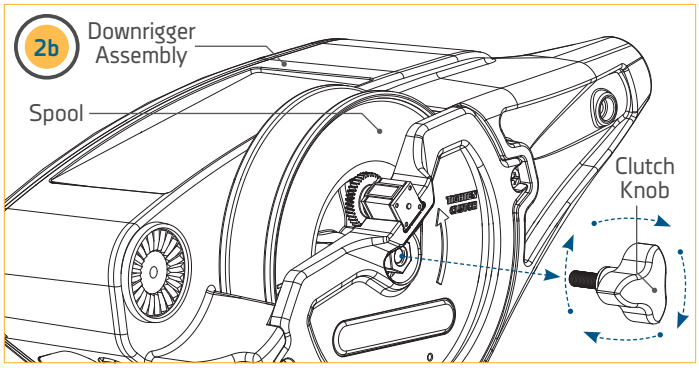

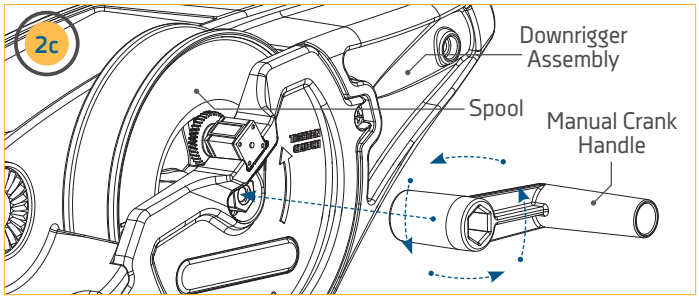

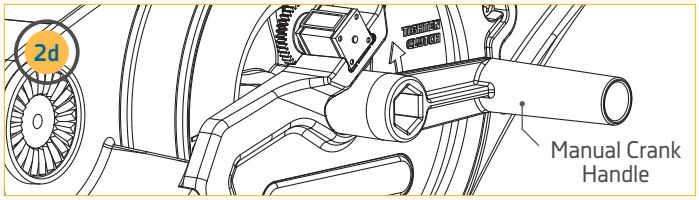

© 2020 | Johnson Outdoors Marine Electronics, Inc. | cannondownriggers.com

REMOVING THE SPOOL COVER AND REPLACING THE SPOOL

Your new downrigger comes with a removable Spool Cover. By removing this cover, you are able to easily gain access to remove the Spool. This feature allows you to easily access tangled line, get it repaired and get you back into action quickly. This feature also allows you to have multiple Spools for different types of line. By purchasing additional Spools, you can wind each with a different type of line (i.e. Uncoated line, Coated Line, braided, etc.). This allows you to switch out desired Lines quickly and easily.

⚠ WARNING

Do not touch the Spool while the downrigger is in use.

⚠ CAUTION

Remove all tension from the line before removing or replacing the Spool.

1

a. Unplug the downrigger and make sure it is not connected to a power source. Then secure the Spool.

⚠ WARNING

Loosening or removing the Clutch Knob will release the Spool and allow it to run free. Make sure you secure the Spool before removing the Clutch Knob. It is recommended that you wear protective gloves and eye protection when working with the Spool.

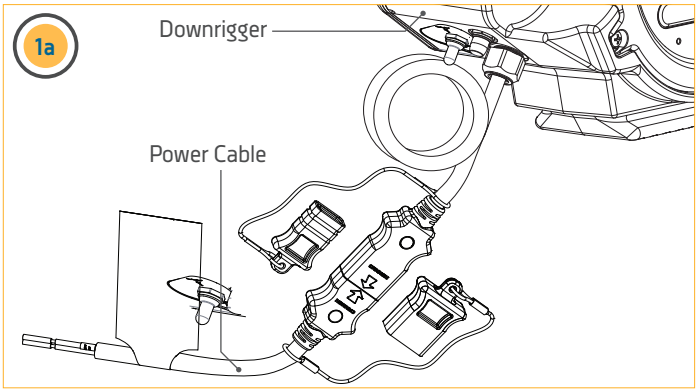

⚠ WARNING

Make sure the downrigger is not connected to a power source.

2

b. Locate the Clutch Knob on the Spool side of the downrigger.

c. Rotate the Clutch Knob clockwise to remove it from the downrigger.

NOTICE: Take care when removing the Clutch Knob over open water so you don't drop it into the water.

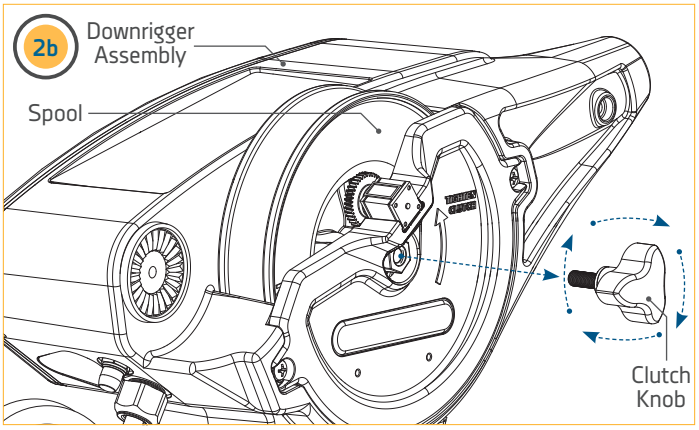

REMOVING THE SPOOL COVER AND REPLACING THE SPOOL

3

d. Loosen the two 1/4-20 Phillips Head Screws on opposite sides on the Spool Cover using a #2 screwdriver.

NOTICE: Screws are captured in the Spool Cover and will not come out completely.

e. With the screws loose, remove the cover to access the Spool. Be sure to carefully disengage the Counter Gear from the Spool Gear. The Counter Gear sits on the shaft of the 3 Digit Counter and should slide off with the Spool Cover.

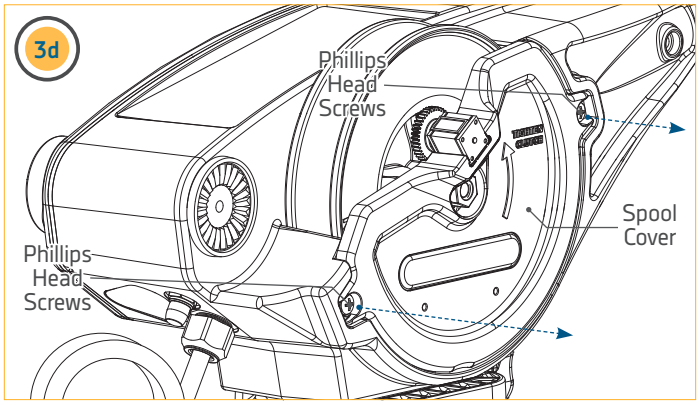

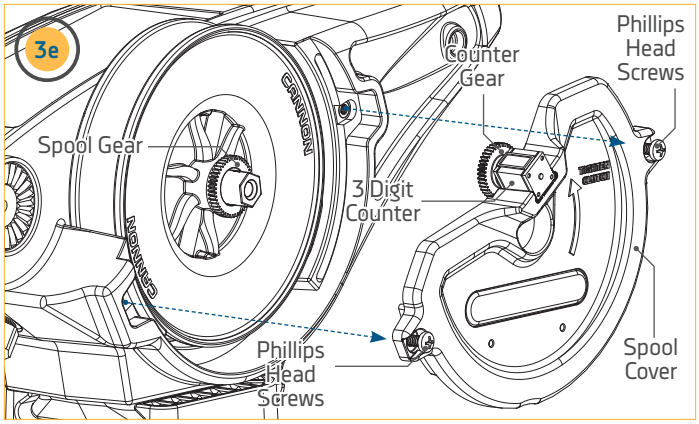

4

f. With the Spool Cover removed, carefully remove the Spool and Spool Gear, making sure the Line is pulled free from the Downrigger Assembly.

g. Take the new Spool and the Spool Gear turn it so that the Line is wound in a counter-clockwise direction.

h. Feed the end of the Line through the base of the Downrigger Assembly so that the end of the Line exits the Downrigger Assembly toward the Boom.

i. Pull the Line so that it is tight and void of extra slack. Avoid kinks and bends in the Line and insert the new Spool so it is seated on the Motor Shaft.

NOTICE: Take care when removing the Spool over open water that the Clutch Pad doesn't get pulled off.

NOTICE: See the "Terminating the Downrigger Line" section of this manual for more details on routing and terminating the Line of the new Spool if needed.

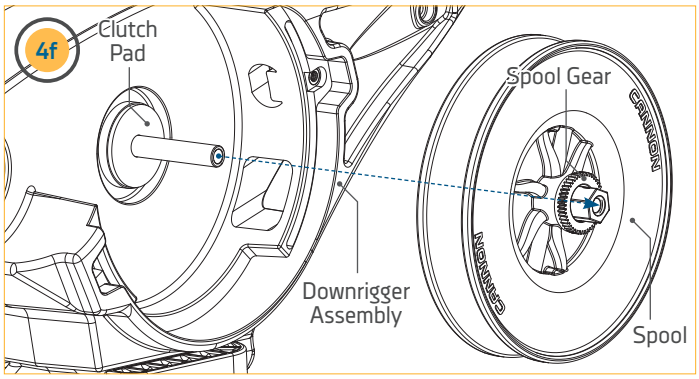

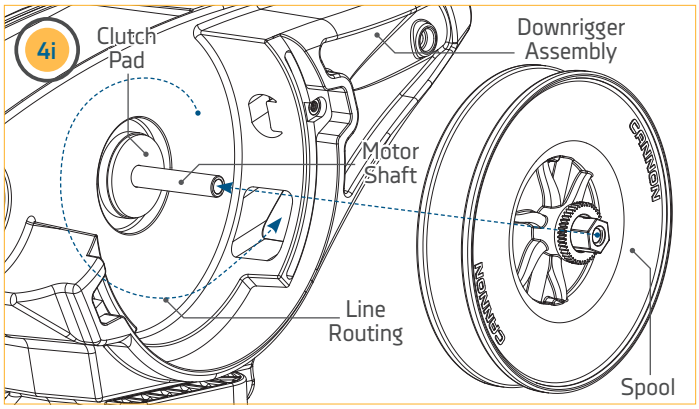

© 2020 | Johnson Outdoors Marine Electronics, Inc. | cannondownriggers.com

5

j. With the Spool and Spool Gear back in place and the Line routed accurately, replace the Spool Cover back in place on the Downrigger Assembly. Be sure to carefully align the Spool Gear and Counter Gear and that the 3 Digit Line Counter is seated onto the Spool Cover. If the 3 Digit Line counter slides out of place it should be reseated from the inside of the Spool Cover. Secure the Spool Cover by tightening the Phillips Head Screws using a #2 Screwdriver.

k. Replace the Clutch Knob on the Spool side of the downrigger.

l. Rotate the Clutch Knob counterclockwise to install it on the downrigger.

NOTICE: The Clutch Knob should be turned counterclockwise to install and tighten. This is also sometimes called left handed thread.

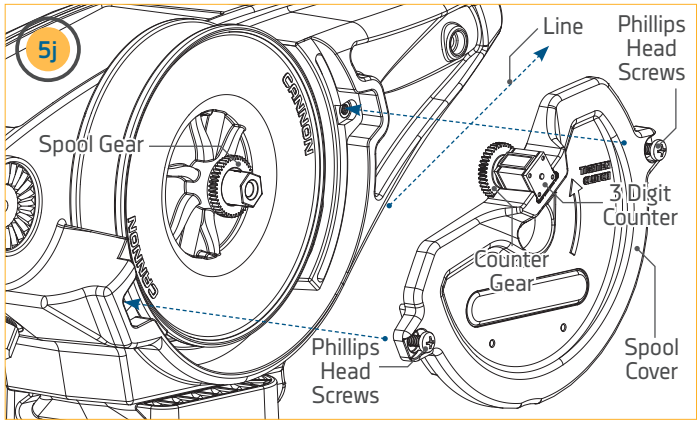

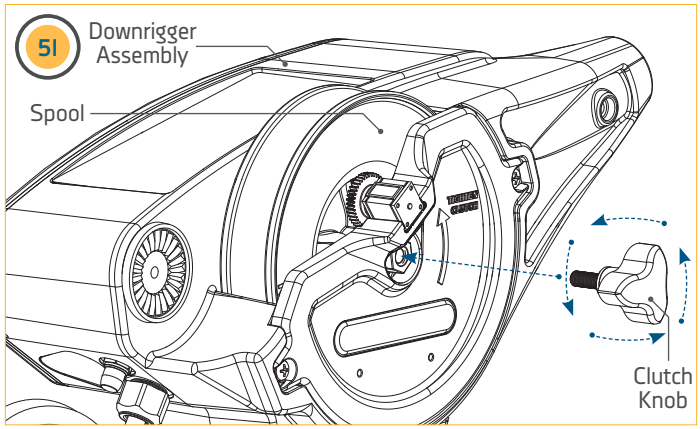

REPLACING THE CLUTCH PAD

To replace the Clutch Pad, follow the steps for "Removing the Spool and Replacing the Spool" in this Manual. Once the Spool is removed, you have access to the Clutch Pad. Simply pull it off the Motor Shaft and replace. Reassemble the Spool and Spool Cover in the reverse order.

⚠ WARNING

Do not touch the Spool while the downrigger is in use.

⚠ CAUTION

Remove all tension from the Line before removing or replacing the Clutch Pad.

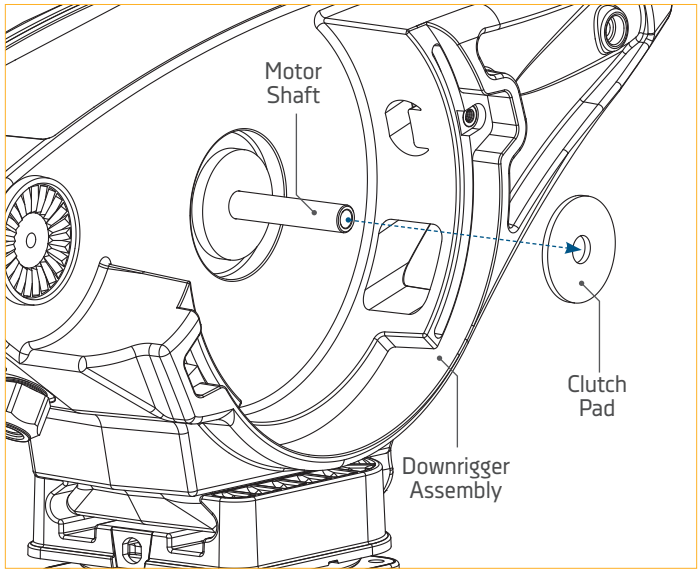

© 2020 | Johnson Outdoors Marine Electronics, Inc. | cannondownriggers.com

CABLE REPLACEMENT

To access the Spool in order to change the line, please follow the direction for "Removing the Spool Cover and Replacing the Spool". Once the cover is removed and the Spool is accessible, continue to replace the cable by following the instructions below.

⚠ WARNING

Do not touch the Spool while the downrigger is in use.

1

a. With the Spool Cover removed, carefully remove the Spool, making sure the Line is pulled free from the Downrigger Assembly.

b. The Line should be wound in a counterclockwise direction, pull it in the opposite direction to unwind it. Unwind the entire Line and remove it.

c. There will be a Crimped Sleeve at the end holding Line in place on the outside of the Spool. Take a Needle Nose Pliers to grasp the Crimped Sleeve and pull it away from the Spool. Cut the end of the Line with a Wire Cutter to remove the Crimped Sleeve and pull the old Line free.

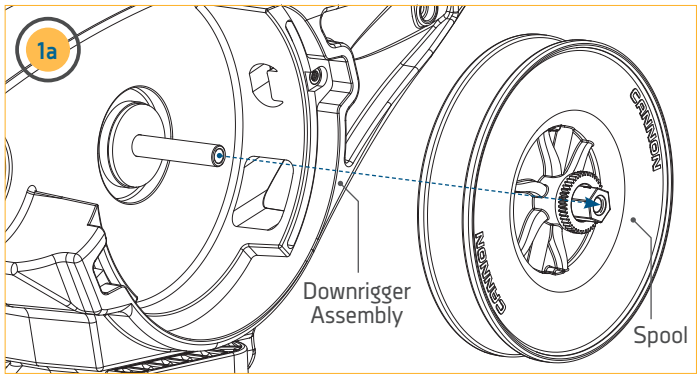





2

d. Take the new Spool and turn it so that the Line is wound in a counterclockwise direction.

e. Insert the end of the Line into the hole in the Center of the Spool so that it exits the outside of the Spool. Place a new Crimped Sleeve on the end of the Line and pull it tight into the center of the Spool.

f. Take the Spool and turn it so that the Line is wound in a counterclockwise direction. When replacing the Spool, make sure that the Line is wound counterclockwise and Exits the Downrigger Assembly. Replace the Spool following the directions provided in the "Removing the Spool Cover and Replacing the Spool" section of this manual.

g. Carefully keep tension on the Line and use the Up Switch to Wrap the Line around the Spool.

h. To finish the downrigger Line, please see the "Terminating the Downrigger" section of this manual.

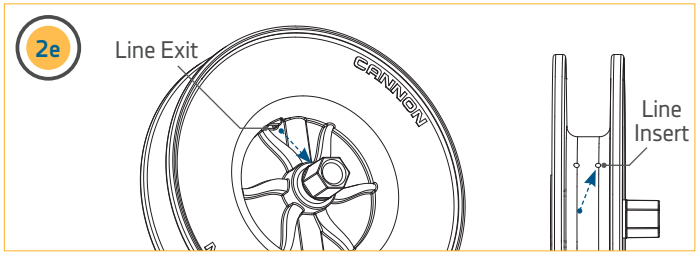

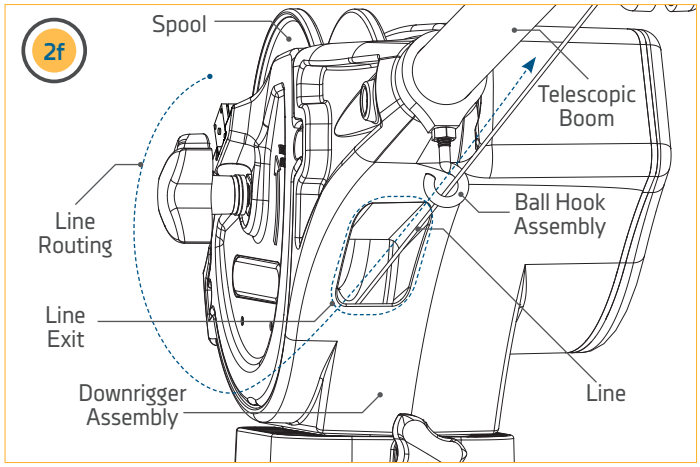

© 2020 | Johnson Outdoors Marine Electronics, Inc. | cannondownriggers.com

ADJUSTING THE LENGTH OF THE TELESCOPIC BOOM

1

a. To adjust the Boom length, with the Telescopic Boom extending away from you, rotate the Boom Clamps approximately ¼ turn counterclockwise to unlock.

b. Slide the Center Tube and Middle Tube of the Telescopic Boom to the desired position.

c. Once in place, tighten the Boom Clamps by rotating clockwise until tight.

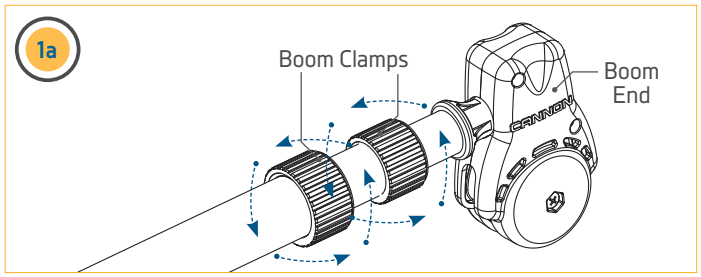

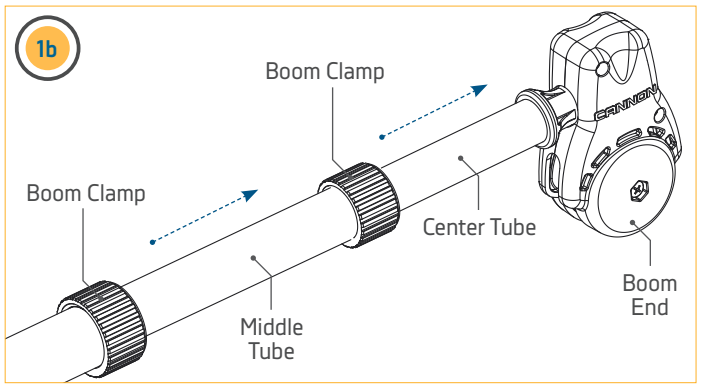

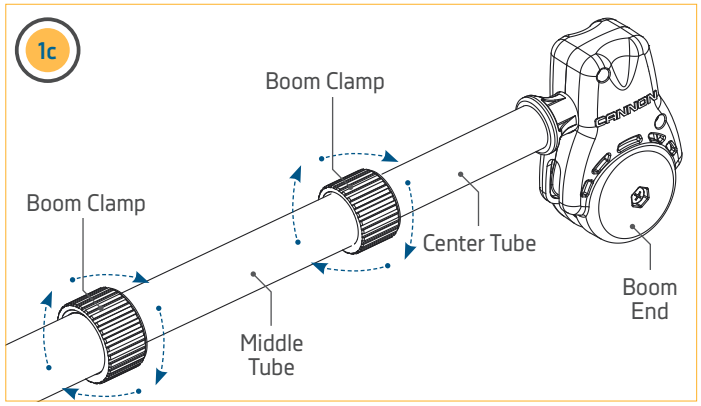

© 2020 | Johnson Outdoors Marine Electronics, Inc. | cannondownriggers.com

TROUBLESHOOTING & FAQ'S

1. Downrigger does not turn "on".
   - Check polarity on Power Cable.
   - Check Circuit Breaker(s).
2. Downrigger does not count the amount of Line retrieved correctly.
   - Check Line Counter.
3. The Clutch slips.
   - Re-tighten the Clutch Knob. The Clutch Knob should be just tight enough that the Clutch does not slip when the downrigger is in normal use. Do not use tools of any kind to tighten the Clutch, hand tightening should always be sufficient. Check the Clutch Pad condition by removing Side Cover and Spool. Replace if necessary. See the Service and Maintenance section of this document for instructions.
4. Does the Magnum support Braid and Mono line?
   - Yes – Short stop and PIC will no longer function with Braided or Mono line. When using the Auto up feature the Weight will stop when the line counter reaches zero.
5. What is the maximum weight that can be used on a Cannon downrigger?
   - Optimum, Optimum TS, Digi-Troll 10, Digi-Troll 10 TS, Digi-Troll 5, Digi-Troll 5 TS, Magnum 10, Magnum 10 TS, Magnum 5, Uni-Troll 10, Uni-Troll 10 TS an Uni-Troll 5 ST all have a weight capacity of 20 lbs.
   - Easi-Troll ST is 12lb
   - Lake-Troll is 8lb
6. How do you keep the Line alignment straight to keep it from stacking on one side of the Spool.
   - The simple fix is to use the ball hook on the boom as a level wind by adjusting the angle of the hook to guide the line in straight.



To watch a video on how to keep the Line alignment straight, follow the link on-line at https://youtu.be/N6NoTpH1tr8

7. What Power Cable is needed for replacement on a Cannon electric downrigger?
   - Cannon item number 1903017 is the replacement battery side Power Cable
   - Cannon item number 3393222 is the replacement downrigger side Power Cable
   - Cannon item number 3883220 is the replacement Power Cable kit (downrigger side and battery side)

NOTICE: For all other malfunctions, visit an Authorized Service Center. You can search for an Authorized Service Center in your area by visiting our Authorized Service Center page, found on-line at cannondownriggers.com, or by calling our customer service number, 800-227-6433.

© 2020 | Johnson Outdoors Marine Electronics, Inc. | cannondownriggers.com

FOR FURTHER TROUBLESHOOTING AND REPAIR

We offer several options to help you troubleshoot and/or repair your product. Please read through the options listed below.

BUY PARTS

In the U.S.A., replacement parts may be ordered directly from Cannon Parts Department, 121 Power Drive, Mankato, Minnesota 56001. Be sure to provide the model and serial numbers of your downrigger when ordering parts. Please use the correct part numbers from the parts list. Payment for any parts ordered from the Cannon Parts Department may be by cash, personal check, Discover Card, MasterCard or VISA. To order, call 1-800-227-6433 or FAX 1-800-527-4464.

FREQUENTLY ASKED QUESTIONS

We have FAQs available on our website to help answer all of your Cannon questions. Visit cannondownriggers.com and click on "Frequently Asked Questions" under the "Service" tab to find an answer to your question.

CALL US (FOR U.S. AND CANADA)

Our consumer service representatives are available Monday – Friday between 7:00 a.m. – 4:30 p.m. CST at 800-227-6433. If you are calling to order parts, please have the 11-character serial number from your product, specific part numbers, and credit card information available. This will help expedite your call and allow us to provide you with the best consumer service possible. You can reference the parts list located in your manual to identify the specific part numbers.

EMAIL US

You can email our customer service department with questions regarding your Cannon products. To email your question, visit cannondownriggers.com and click on "Contact Us" under the "Service" tab.

AUTHORIZED SERVICE CENTERS

Cannon works with authorized service centers in the United States and Canada to provide parts and service for your downrigger. Please visit our "Dealer Locater" page to locate a service center in your area on-line at cannondownriggers.com.

COMPLIANCE STATEMENTS

ENVIRONMENTAL COMPLIANCE STATEMENT

It is the intention of JOME to be a responsible corporate citizen, operating in compliance with known and applicable environmental regulations, and a good neighbor in the communities where we make or sell our products.

WEEE DIRECTIVE

EU Directive 2002/96/EC "Waste of Electrical and Electronic Equipment Directive (WEEE)" impacts most distributors, sellers, and manufacturers of consumer electronics in the European Union. The WEEE Directive requires the producer of consumer electronics to take responsibility for the management of waste from their products to achieve environmentally responsible disposal during the product life cycle.

WEEE compliance may not be required in your location for electrical & electronic equipment (EEE), nor may it be required for EEE designed and intended as fixed or temporary installation in transportation vehicles such as automobiles, aircraft, and boats. In some European Union member states, these vehicles are considered outside of the scope of the Directive, and EEE for those applications can be considered excluded from the WEEE Directive requirement.

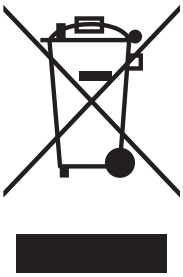

This symbol (WEEE wheelie bin) on product indicates the product must not be disposed of with other household refuse. It must be disposed of and collected for recycling and recovery of waste EEE. Johnson Outdoors Inc. will mark all EEE products in accordance with the WEEE Directive. It is our goal to comply in the collection, treatment, recovery, and environmentally sound disposal of those products; however, these requirements do vary within European Union member states. For more information about where you should dispose of your waste equipment for recycling and recovery and/or your European Union member state requirements, please contact your dealer or distributor from which your product was purchased.

DISPOSAL

Johnson Outdoors Inc. products are not subject to the disposal regulations EAG-VO (electric devices directive) that implements the WEEE directive. Nevertheless, never dispose of your Minn Kota motor in a garbage bin but at the proper place of collection of your local town council.

Never dispose of battery in a garbage bin. Comply with the disposal directions of the manufacturer or his representative and dispose of them at the proper place of collection of your local town council.

ENVIRONMENTAL RATINGS

Ambient operating temperature range: -10C to 50C
Ambient operating humidity range: 5% to 95%
Maximum operating altitude: 10,000 feet

TRADEMARKS

Cannon® and Magnum™ are trademarked by or registered trademarks of Johnson Outdoors Marine Electronics, Inc.

© 2020 | Johnson Outdoors Marine Electronics, Inc. | cannondownriggers.com

PARTS DIAGRAM & PARTS LIST

MAGNUM 5 PARTS DIAGRAM & PARTS LIST

The parts diagram and parts list provides Cannon® WEEE compliance disassembly instructions. For more information about where you should dispose of your waste equipment for recycling and recovery and/or your European Union member state requirements, please contact your dealer or distributor from which your product was purchased. Tools required, but not limited to: flat head screwdriver, Phillips screwdriver, socket set, pliers and wire cutters.

MAGNUM 5 DOWNRIGGER

DOWNRIGGER FRAME & MOTOR PARTS DIAGRAM

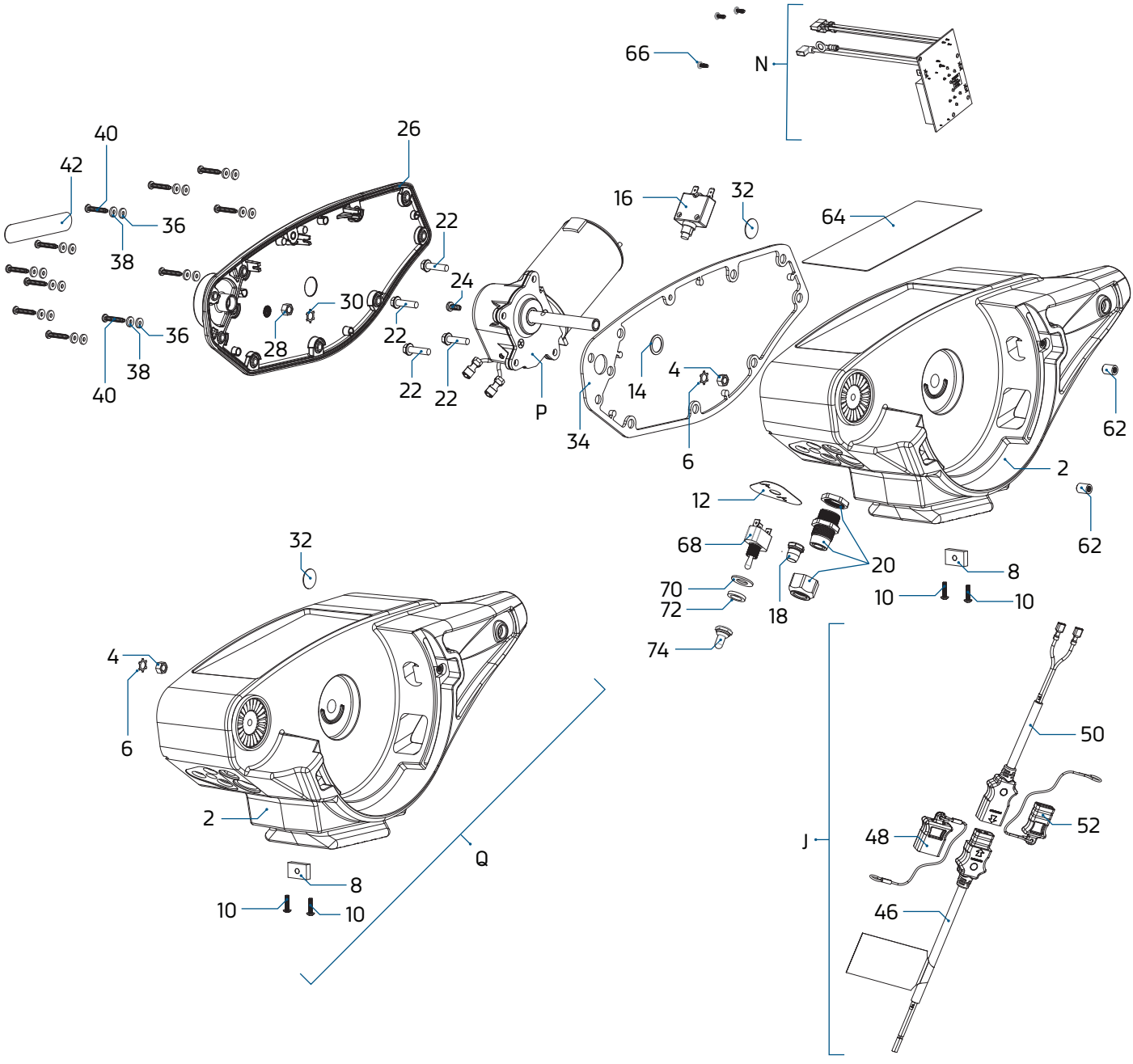

DOWNRIGGER FRAME & MOTOR PARTS LIST

Assembly	Part #	Description	Notes	Qty.
J	3993220	ASSY, POWER CABLE, RETRO		1
N	3394006	ASY PCA, NEW MAG10		1
P	3996515	MOTOR/GEAR HOUSING ASSY		1
Q	3772545	OPTIMUM BLACK FRAME KIT		1
Item	**Part #**	**Description**	**Notes**	**Qty.**
2	✖	FRAME, BLACK, DIGI-TROLL BT		1
4	3393130	NUT-HEX 1/4-20 SS RIE COATED		1
6	3394722	INSERT, PUSH ON		1
8	3394702	INSERT, BASE, MAGNI 565		1
10	2373450	SCREW-#8-18 X 3/8" THRD.CUT SS		2
12	3396601	SEAL PLATE, MAGNUM		1
14	3391730	WASHER, SEAL, DATA		1
16	3398205	CIRCUIT BREAKER, 25 AMP		1
18	1221491	BOOT CIRCUIT BREAKER		1
20	3392920	STRAIN-RELIEF, HEYCO M4502		1
22	3393411	SCREW-FLANGE HEX HI-LO		4
24	3393486	SCREW-#10-16 X .25" BT		1
26	3390203	COVER, MOTOR		1
28	3393130	NUT-HEX 1/4-20 SS RIE COATED		1
30	3394722	INSERT, PUSH ON		1
32	401966-3	MIC VENT,PTFE LU LRA MATERIAL		1
34	3396902	GASKET, COVER		1
36	3391732	WASHER, SEALING		11
38	3394602	WASHER-FLAT #8 SS		11
40	3393480	SCREW-#10 X 1.0" PPH HI-LO SS		11
42	3395634	DECAL- SIDE, BLACK	*CANNON DECAL*	2
44▲	2065507	LABEL "DO NOT RETURN TO STORE"		1
46	3393200	CABLE-POWER, BATTERY		1
48	3393201	CAP ASSY, POWER CABLE, BATTERY		1
50	3392222	CABLE-POWER, MOTOR, RETRO		1
52	3393210	CAP ASSY, POWER CABLE, MOTOR		1
54▲	3397130	MANUAL, MAGNUM ST/STX		1
56 ▲	3397151	INSTALL, MAGNUM		1
58▲	3397139	MANUAL DISCLAIMER DWNLOAD INFO		1
60▲	3395800	DECAL, WARNING, POWER CABLE		1
62	3394721	INSERT, FRAME 1/4-20		2

▲ *Not shown on Parts Diagram.*
✖ *This part is included in an assembly and cannot be ordered individually.*

© 2020 | Johnson Outdoors Marine Electronics, Inc. | cannondownriggers.com

Item	Part #	Description		Qty.
64	3395651	DECAL, KEYPAD COVER, MAG 5		1
66	3393471	SCREW - #6-19 X 3/8 TORX ZP		3
68	2286792	SWITCH, TOGGLE		1
70	3391722	WASHER-FLAT 7/16 SAE		1
72	2287693	HWD SHIM SWITCH .750 x .1		1
74	1221490	BOOT SWITCH		1

▲ *Not shown on Parts Diagram.*
✖ *This part is included in an assembly and cannot be ordered individually.*

SPOOL & COVER PARTS DIAGRAM

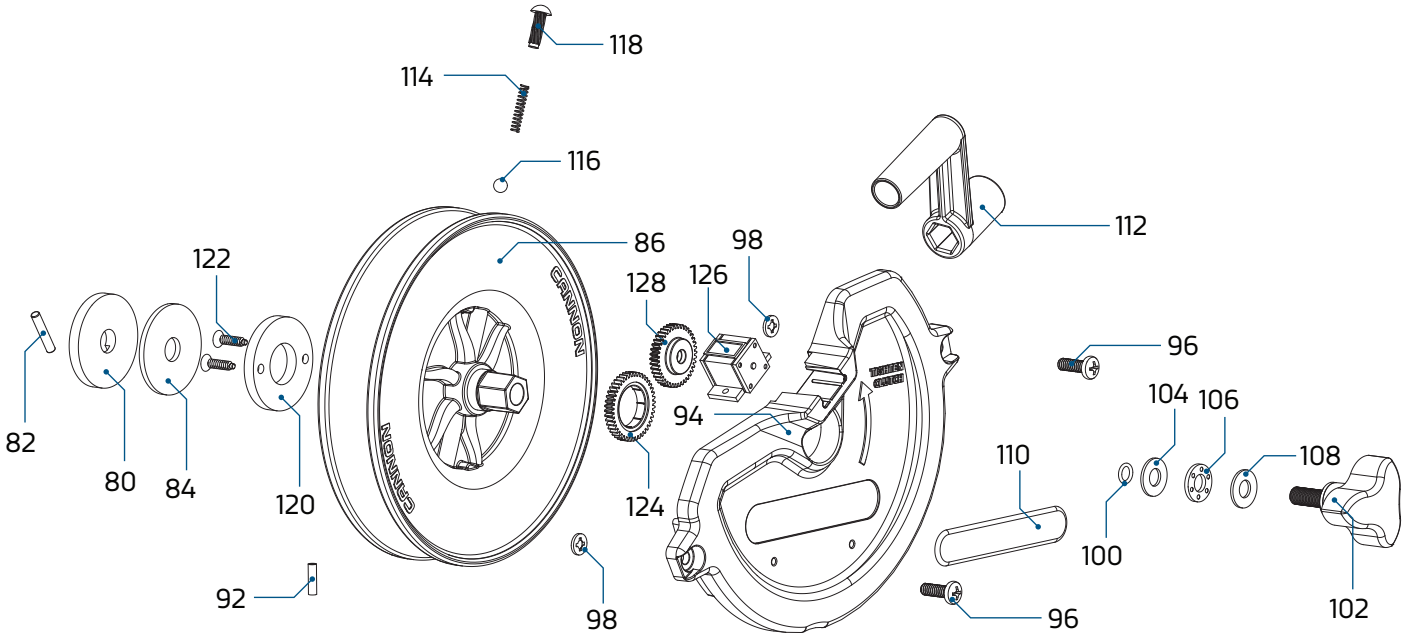

MAGNUM 5

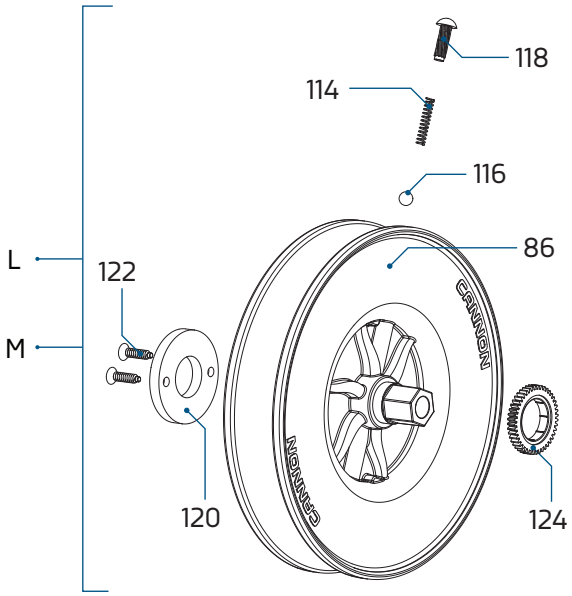

© 2020 | Johnson Outdoors Marine Electronics, Inc. | cannondownriggers.com

SPOOL & COVER PARTS LIST

Assembly	Part #	Description	Notes	Qty.
M	3997905	ASSY-CNN, REEL & GEAR, STD		1
L	3997906	ASSY-CNN, REEL & GEAR,METRIC	*METRIC*	1
Item	**Part #**	**Description**	**Notes**	**Qty.**
80	3391907	PLATE, CLUTCH SHAFT		1
82	3392640	PIN, DRIVESHAFT		1
84	3391711	PAD, CLUTCH, LO-PRO		1
86	3397907	REEL, ROUGH, 3.75" OD		1
88 ▲	1015391	WIRE, .034 DIA, CAMO BULK		400
90 ▲	3396300	RUBBER BAND 7" #117-B		1
92	9100070	CON LEADER SLEEVE		1
94	3390205	COVER, REEL		1
96	2373434	SCREW-1/4-20 X 3/4 SS PPMS		2
98	2071718	WASHER #10 NYLON RETAINING		2
100	3394605	O-RING, KNOB		1
102	3390103	KNOB, SOFT GRIP, CLUTCH		1
104	3391737	HDW WASHER,THRUST,17-7 SS		1
106	9010280	HDW BEARING, THRUST		1
108	3391737	HDW WASHER,THRUST,17-7 SS		1
110	3395634	DECAL- SIDE, BLACK	*CANNON DECAL*	2
112	3390910	HANDLE-CRANK, MANUAL		1
114	3392707	SPRING, REEL		1
116	3396020	BALL BEARING, REEL		1
118	3393474	SCREW-DRIVE #14 X .75" SS		1
120	3391906	PLATE, CLUTCH REEL		1
122	3393418	SCREW-#10-16X.75"HI-LO SS		2
124	0233560	GEAR REEL		1
	3333011	GEAR REEL (METRIC)	*METRIC*	1
126	0220477	METER 3 DIGIT		1
	3230011	COUNTER 3 DIGIT (METRIC)	*METRIC*	1
128	0833561	GEAR COUNTER		1
	3333010	GEAR COUNTER (METRIC)	*METRIC*	1

▲ *Not shown on Parts Diagram.*
✖ *This part is included in an assembly and cannot be ordered individually.*

© 2020 | Johnson Outdoors Marine Electronics, Inc. | cannondownriggers.com

BASE & INSTALLATION HARDWARE PARTS DIAGRAM

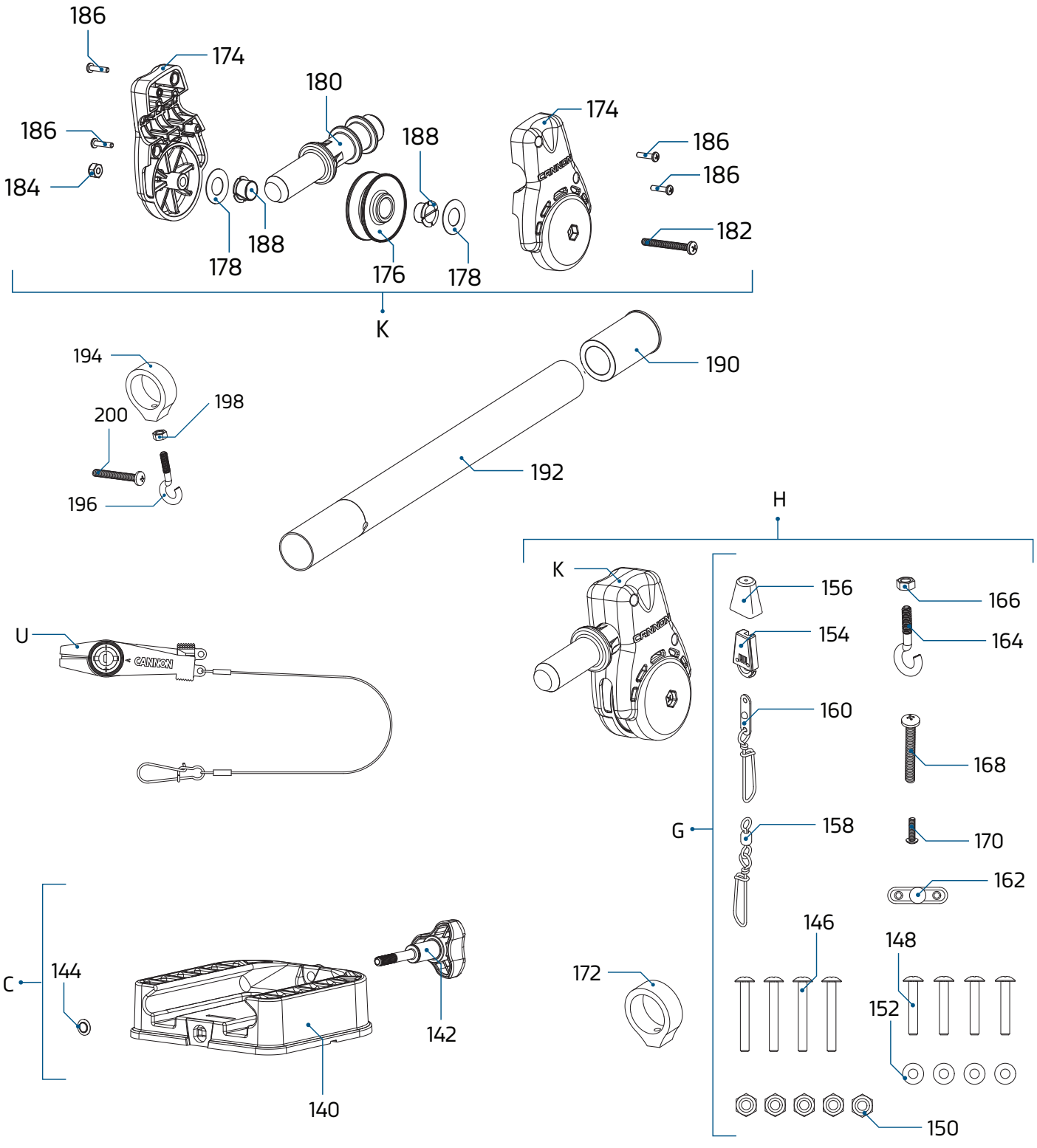

© 2020 | Johnson Outdoors Marine Electronics, Inc. | cannondownriggers.com

BASE & INSTALLATION HARDWARE PARTS LIST

Assembly	Part #	Description		Qty.
C	3991930	ASSY-CNN, MNT BASE DT/MAG		1
G	3994807	ASSY-BAG, DT PRO/MAG ST		1
H	3994815	BAG ASSY, BOOM END		1
U	2277002A	ASY HDW RELEASE UNIVERSAL		2
K	3990200	ASSY-CNN, BOOM END		1
Item	**Part #**	**Description**		**Qty.**
140	3391955	BASE-MOUNT, MAG ST		1
142	3390101	KNOB-CANNON, SOFT GRIP		1
144	3393000	RING, RETAINING, 1/4" SHAFT		1
146	9280720	HDW SCR 1/4 20X2 TRUSS HD PHIL		4
148	9280713	HDW SCR 1/4 20X1 1/2 TRUSS HEA		4
150	2263103	NUT-1/4-20 NYLOCK SS		5
152	2371712	WASHER-FLAT 9/32 X 5/8 X 1/16		4
154	9100100	CON TERMINATOR		1
156	9100101	CUSHION SLEEVE TERMINATOR		1
158	9100620	HDW SNAP SWIVEL 4/0-37 MARLIN		1
160	2200148	ASY SNAP & INSULATOR		1
162	✖	CON CABLE INSULATOR		1
164	9040040	HDW BOLT 1/4-20 ROLLEDTHD HOOK		1
166	2263102	NUT-HEX 1/4-20 SS 300SRS		1
168	3393461	SCREW-1/4-20 x 2" SS, PPH		1
170	2372100	SCREW-#8-18 X 5/8 THD* (SS)		1
172	3397900	BALL HOOK EXTRUSION		1
174	3392520	CASE, PULLEY		2
176	3392300	SHEEVE, PULLEY		1
178	3391507	SHIM, BOOM END		2
180	3392013	BOOM END, NEW		1
182	3393485	SCREW-#10-24X1.75 PPHMS S		1
184	3393124	NUT-#10-32 NYLOK 18-8 SS RIE		1
186	2303412	SCREW-#6-20 X 5/8 SELF TAP		4
188	3390005	BEARING-NYLINER, #8L5-1/2-F		2
190	2290828	24" BOOM-HEAVY DUTY		1
192	3395905	ADAPTER, BOOM END		1
194	3397900	BALL HOOK EXTRUSION		1
196	9040040	HDW BOLT 1/4-20 ROLLEDTHD HOOK		1
198	2263102	NUT-HEX 1/4-20 SS 300SRS		1
200	3393461	SCREW-1/4-20 x 2" SS, PPH		1

▲ *Not shown on Parts Diagram.*
✖ *This part is included in an assembly and cannot be ordered individually.*

© 2020 | Johnson Outdoors Marine Electronics, Inc. | cannondownriggers.com

REAR MOUNT ROD HOLDER PARTS DIAGRAM

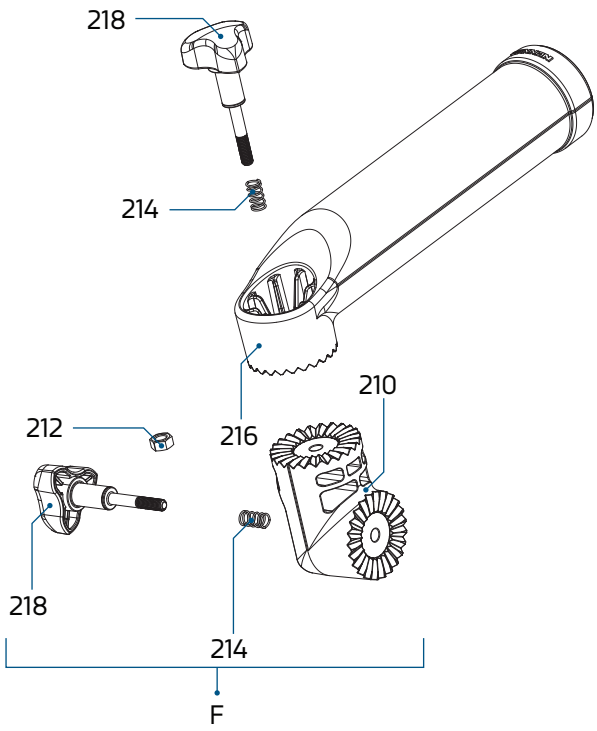

© 2020 | Johnson Outdoors Marine Electronics, Inc. | cannondownriggers.com

REAR MOUNT ROD HOLDER PARTS LIST

Assembly	Part #	Description	Notes	Qty.
F	3991904	ASSY-CNN, ROD HOLDER		1
Item	**Part #**	**Description**	**Notes**	**Qty.**
210	3394200	ARM, DUAL AXIS-ROD HLDR		1
212	✖	NUT-HEX 1/4-20 SS RIE COATED		1
214	2287002	HDW SPRING RELEASE PIN		2
216	3392033	TUBE, DUAL AXIS RD HLDR		1
218	3390101	KNOB-CANNON, SOFT GRIP		2

▲ *Not shown on Parts Diagram.*
✖ *This part is included in an assembly and cannot be ordered individually.*

© 2020 | Johnson Outdoors Marine Electronics, Inc. | cannondownriggers.com

MAGNUM 10 & MAGNUM 10 TS PARTS DIAGRAM & PARTS LIST

The parts diagram and parts list provides Cannon® WEEE compliance disassembly instructions. For more information about where you should dispose of your waste equipment for recycling and recovery and/or your European Union member state requirements, please contact your dealer or distributor from which your product was purchased. Tools required, but not limited to: flat head screwdriver, Phillips screwdriver, socket set, pliers and wire cutters.

MAGNUM 10 & MAGNUM 10 TS DOWNRIGGER

DOWNRIGGER FRAME & MOTOR PARTS DIAGRAM

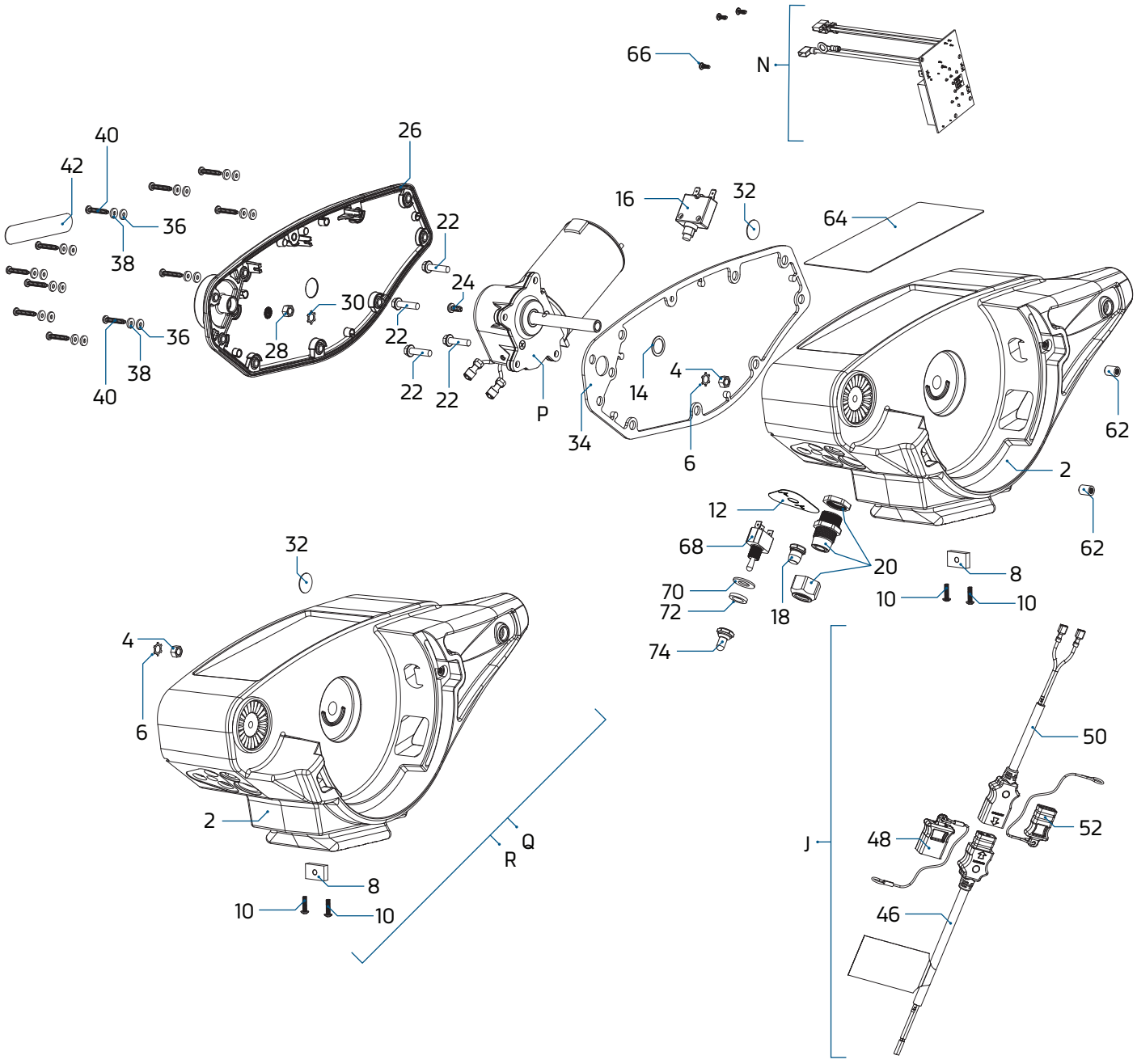

© 2020 | Johnson Outdoors Marine Electronics, Inc. | cannondownriggers.com

DOWNRIGGER FRAME & MOTOR PARTS LIST

Assembly	Part #	Description	Notes	Qty.
J	3993220	ASSY, POWER CABLE, RETRO		1
N	3394006	ASSY PCA STX		1
P	3996515	MOTOR/GEAR HOUSING ASSY		1
Q	3772545	OPTIMUM BLACK FRAME KIT		1
R	3772546	OPTIMUM WHITE FRAME KIT	♦ *TS*	1
Item	**Part #**	**Description**	**Notes**	**Qty.**
2	✖	FRAME, WHITE, DIGI-TROLL BT (3392546)	♦ *TS*	1
	✖	FRAME, BLACK, DIGI-TROLL BT (3392545)		1
4	3393130	NUT-HEX 1/4-20 SS RIE COATED		1
6	3394722	INSERT, PUSH ON		1
8	3394702	INSERT, BASE, MAGNI 565		1
10	2373450	SCREW-#8-18 X 3/8" THRD.CUT SS		2
12	3396601	SEAL PLATE, MAGNUM		1
14	3391730	WASHER, SEAL, DATA		1
16	3398205	CIRCUIT BREAKER, 25 AMP		1
18	1221491	BOOT CIRCUIT BREAKER		1
20	3392920	STRAIN-RELIEF, HEYCO M4502		1
22	3393411	SCREW-FLANGE HEX HI-LO		4
24	3393486	SCREW-#10-16 X .25" BT		1
26	3390204	COVER, MOTOR TS	♦ *TS*	1
	3390203	COVER, MOTOR		1
28	3393130	NUT-HEX 1/4-20 SS RIE COATED		1
30	3394722	INSERT, PUSH ON		1
32	401966-3	MIC VENT,PTFE LU LRA MATERIAL		1
34	3396902	GASKET, COVER		1
36	3391732	WASHER, SEALING		11
38	3394602	WASHER-FLAT #8 SS		11
40	3393480	SCREW-#10 X 1.0" PPH HI-LO SS		11
42	3395634	DECAL- SIDE, BLACK	*CANNON DECAL*	2
44▲	2065507	LABEL "DO NOT RETURN TO STORE"		1
46	3393200	CABLE-POWER, BATTERY		1
48	3393201	CAP ASSY, POWER CABLE, BATTERY		1
50	3392222	CABLE-POWER, MOTOR, RETRO		1
52	3393210	CAP ASSY, POWER CABLE, MOTOR		1
54▲	3397130	MANUAL, MAGNUM ST/STX		1
56 ▲	3397151	INSTRCT, INSTALL, MAGNUM		1
58▲	3397139	MANUAL DISCLAIMER DWNLOAD INFO		1

▲ *Not shown on Parts Diagram.*
✖ *This part is included in an assembly and cannot be ordered individually.*

♦ *Only available with the Magnum TS series downrigger.*

© 2020 | Johnson Outdoors Marine Electronics, Inc. | cannondownriggers.com

PARTS DIAGRAM & PARTS LIST

Item	Part #	Description		Qty.
60▲	3395800	DECAL, WARNING, POWER CABLE		1
62	3394721	INSERT, FRAME 1/4-20		2
64	3395652	DECAL, KEYPAD COVER, MAG 10		1
	3395653	DECAL, KEYPAD CRV, MAG 10TS	♦ *TS*	1
66	3393471	SCREW-#16-19 X 3/8 TORX ZP		3
68	2286792	SWITCH, TOGGLE		1
70	3391722	WASHER-FLAT 7/16 SAE		1
72	2286793	HWD SHIM SWITCH .750 X .1		1
74	1221490	BOOT SWITCH		1

▲ *Not shown on Parts Diagram.*
✖ *This part is included in an assembly and cannot be ordered individually.*

♦ *Only available with the Magnum TS series downrigger.*

© 2020 | Johnson Outdoors Marine Electronics, Inc. | cannondownriggers.com

BASE & INSTALLATION HARDWARE PARTS DIAGRAM

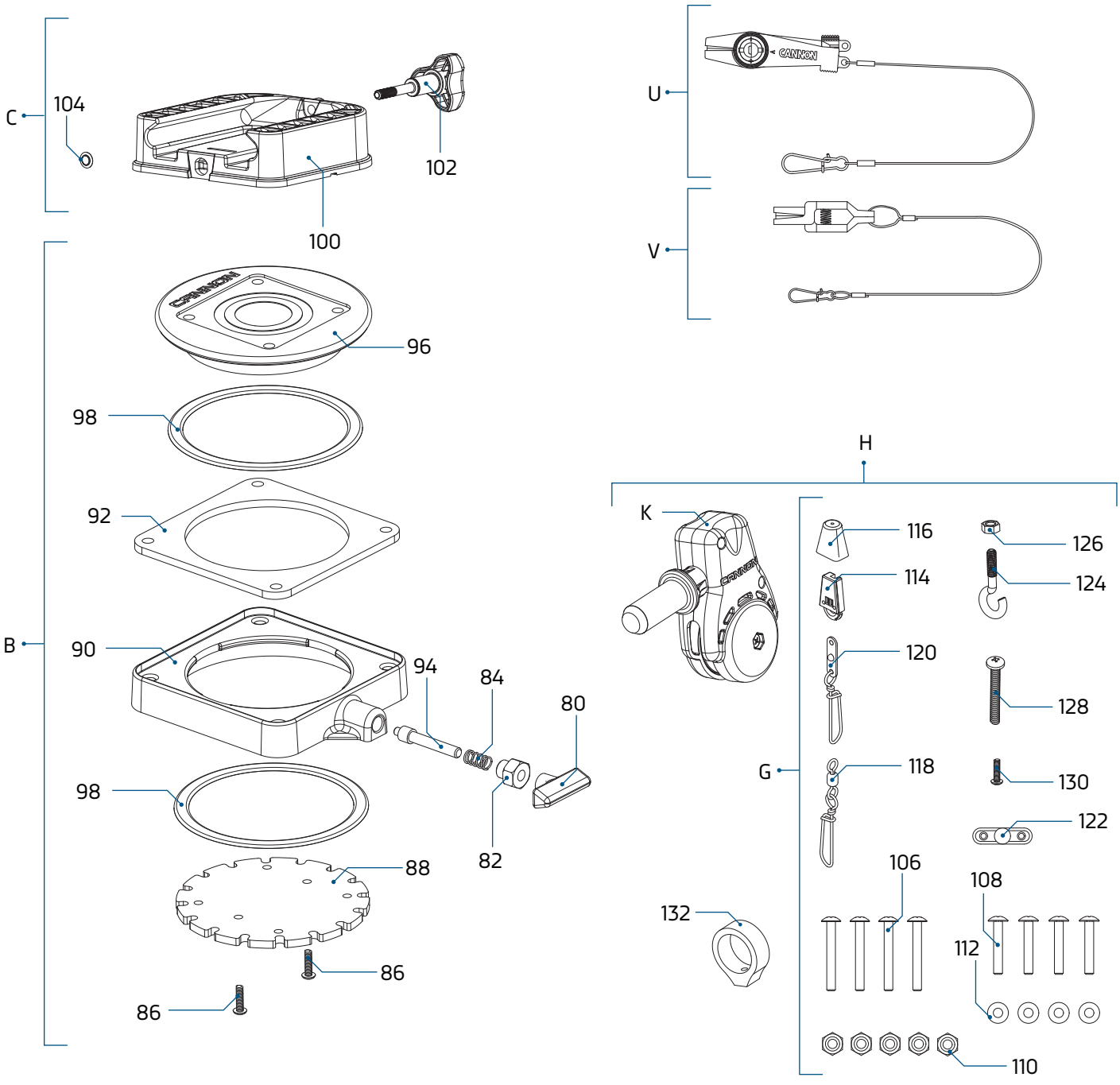

BASE & INSTALLATION HARDWARE PARTS LIST

Assembly	Part #	Description		Qty.
B	3991913	CNN ASSY, SWIVEL BASE		1
C	3991930	ASSY-CNN, MNT BASE DT/MAG		1
K	3990200	ASSY-CNN, BOOM END		1
G	3994807	ASSY-BAG, DT PRO/MAG ST		1
H	3994815	BAG ASSY, BOOM END		1
U	2277002A	ASY HDW RELEASE UNIVERSAL		2
V	2200109	SALTWATER RELEASE, OR8 BE	♦ *TS*	2
Item	**Part #**	**Description**		**Qty.**
80	2249001	HDW KNB RELEASE PIN		1
82	2277001	HDW RETAINER RELEASE NUT		1
84	2287002	HDW SPRING RELEASE PIN		1
86	2372100	SCREW-#8-18 X 5/8 THD* (SS)		2
88	3391999	PLATE-INDEX, SWIVEL BASE		1
90	3391923	BASE, SWIVEL MOLDED		1
92	3391958	PLATE, SUPPORT TOP		1
94	3392600	PIN - RELEASE		1
96	3396430	TOP, SWIVEL MOLDED		1
98	9010004	HDW BEARING SWIVEL BASE		2
100	3391955	BASE-MOUNT, MAG ST		1
102	3390101	KNOB-CANNON, SOFT GRIP		1
104	3393000	RING, RETAINING, 1/4" SHAFT		1
106	9280720	HDW SCR 1/4 20X2 TRUSS HD PHIL		4
108	9280713	HDW SCR 1/4 20X1 1/2 TRUSS HEA		4
110	2263103	NUT-1/4-20 NYLOCK SS		5
112	2371712	WASHER-FLAT 9/32 X 5/8 X 1/16		4
114	9100100	CON TERMINATOR		1
116	9100101	CUSHION SLEEVE TERMINATOR		1
118	9100620	HDW SNAP SWIVEL 4/0-37 MARLIN		1
120	2200148	ASY SNAP & INSULATOR		1
122 ▲	✖	CON CABLE INSULATOR		1
124	9040040	HDW BOLT 1/4-20 ROLLEDTHD HOOK		1
126	2263102	NUT-HEX 1/4-20 SS 300SRS		1
128	3393461	SCREW-1/4-20 x 2" SS, PPH		1
130	2372100	SCREW-#8-18 X 5/8 THD* (SS)		1
132	3397900	BALL HOOK EXTRUSION		1

▲ *Not shown on Parts Diagram.*
✖ *This part is included in an assembly and cannot be ordered individually.*

♦ *Only available with the Magnum TS series downrigger.*

© 2020 | Johnson Outdoors Marine Electronics, Inc. | cannondownriggers.com

SPOOL & COVER PARTS DIAGRAM

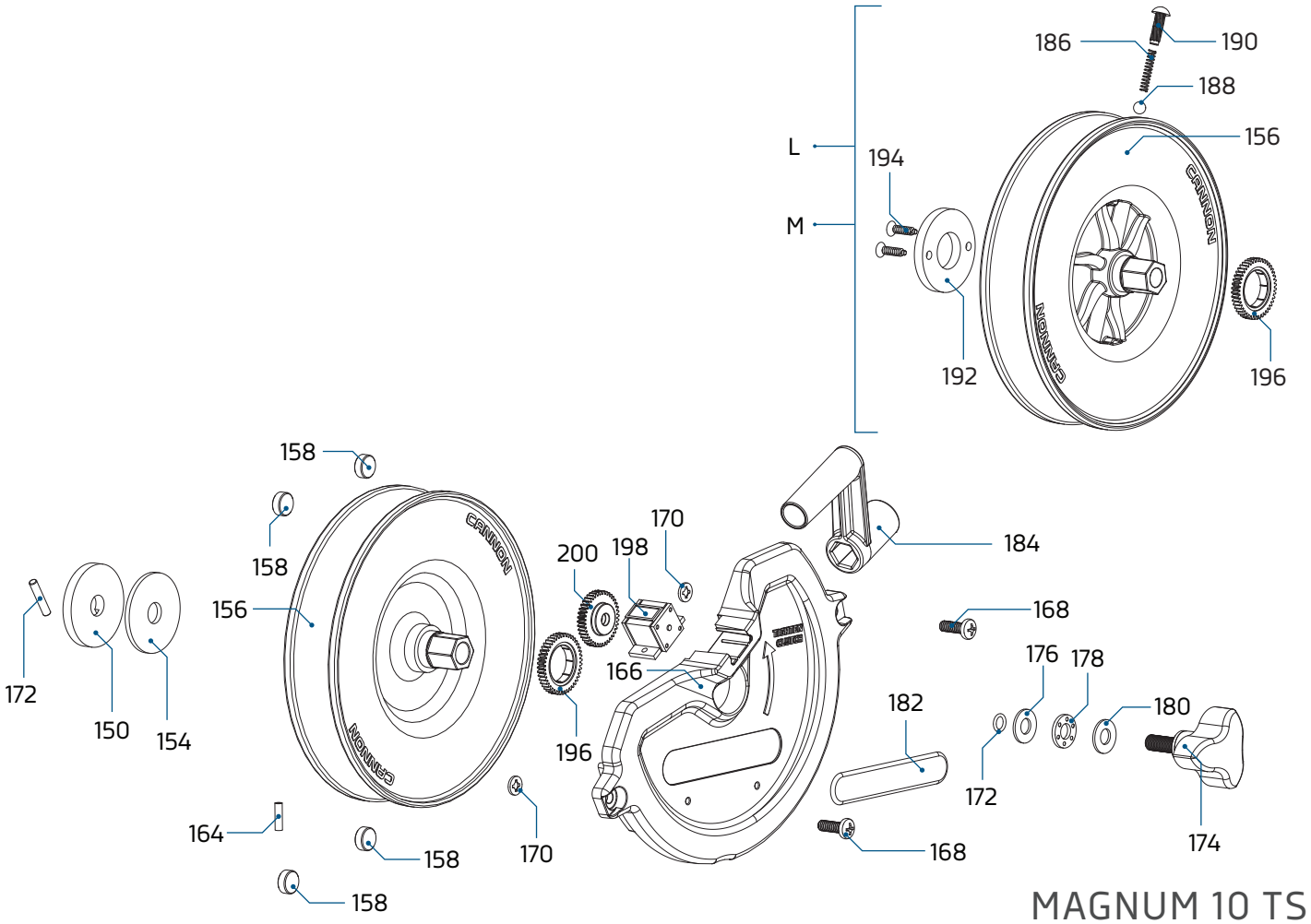

MAGNUM 10 TS

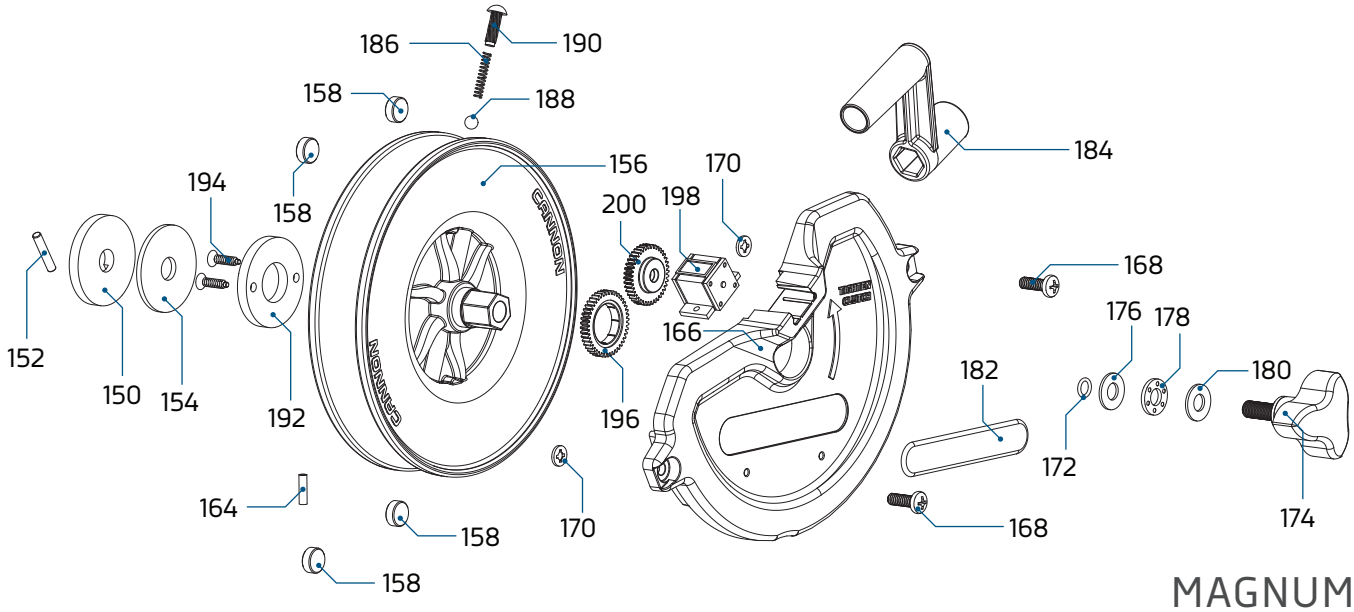

MAGNUM 10

SPOOL & COVER PARTS LIST

Item	Part #	Description	Notes	Qty.
L	3997906	ASSY-CNN, REEL & GEAR, METRIC	*METRIC*	1
M	3397905	ASSY, CNN, REEL & GEAR, STD		1
Item	**Part #**	**Description**	**Notes**	**Qty.**
150	3391907	PLATE, CLUTCH SHAFT		1
152	3392640	PIN, DRIVESHAFT		1
154	3391711	PAD, CLUTCH, LO-PRO		1
156	3397908	REEL, ROUGH 3.75" OD SS	♦ *TS*	1
	3397907	REEL, ROUGH, 3.75" OD		1
158	1459666	CERAMIC MAGNET P/N 42-B-5020		4
160 ▲	1015391	WIRE, .034 DIA, CAMO BULK		400
162 ▲	3396300	RUBBER BAND 7" #117-B		1
164	9100070	CON LEADER SLEEVE		1
166	3390206	COVER, REEL TS	♦ *TS*	1
	3390205	COVER, REEL		1
168	2373434	SCREW-1/4-20 X 3/4 SS PPMS		2
170	2071718	WASHER #10 NYLON RETAINING		2
172	3394605	O-RING, KNOB		1
174	3390103	KNOB, SOFT GRIP, CLUTCH		1
176	3391737	HDW WASHER,THRUST,17-7 SS		1
178	9010280	HDW BEARING, THRUST		1
180	3391737	HDW WASHER,THRUST,17-7 SS		1
182	3395634	DECAL- SIDE, BLACK	*CANNON DECAL*	2
184	3390910	HANDLE-CRANK, MANUAL		1
186	3392707	SPRING, REEL	♦ *TS*	1
188	3396020	BALL BEARING, REEL	♦ *TS*	1
190	3393474	SCREW-DRIVE #14 X .75" SS	♦ *TS*	1
192	3391906	PLATE, CLUTCH REEL	♦ *TS*	1
194	3393418	SCREW-#10-16X.75"HI-LO SS	♦ *TS*	2
196	0233560	GEAR REEL		1
	3333011	GEAR REEL (METRIC)	*METRIC*	1
198	0220477	METER 3 DIGIT		1
	3230011	COUNTER 3 DIGIT (METRIC)	*METRIC*	1
200	0833561	GEAR COUNTER		1
	3333010	GEAR COUNTER (METRIC)	*METRIC*	1

▲ *Not shown on Parts Diagram.*
✖ *This part is included in an assembly and cannot be ordered individually.*

♦ *Only available with the Magnum TS series downrigger.*

© 2020 | Johnson Outdoors Marine Electronics, Inc. | cannondownriggers.com

TELESCOPIC BOOM & BOOM END PARTS DIAGRAM

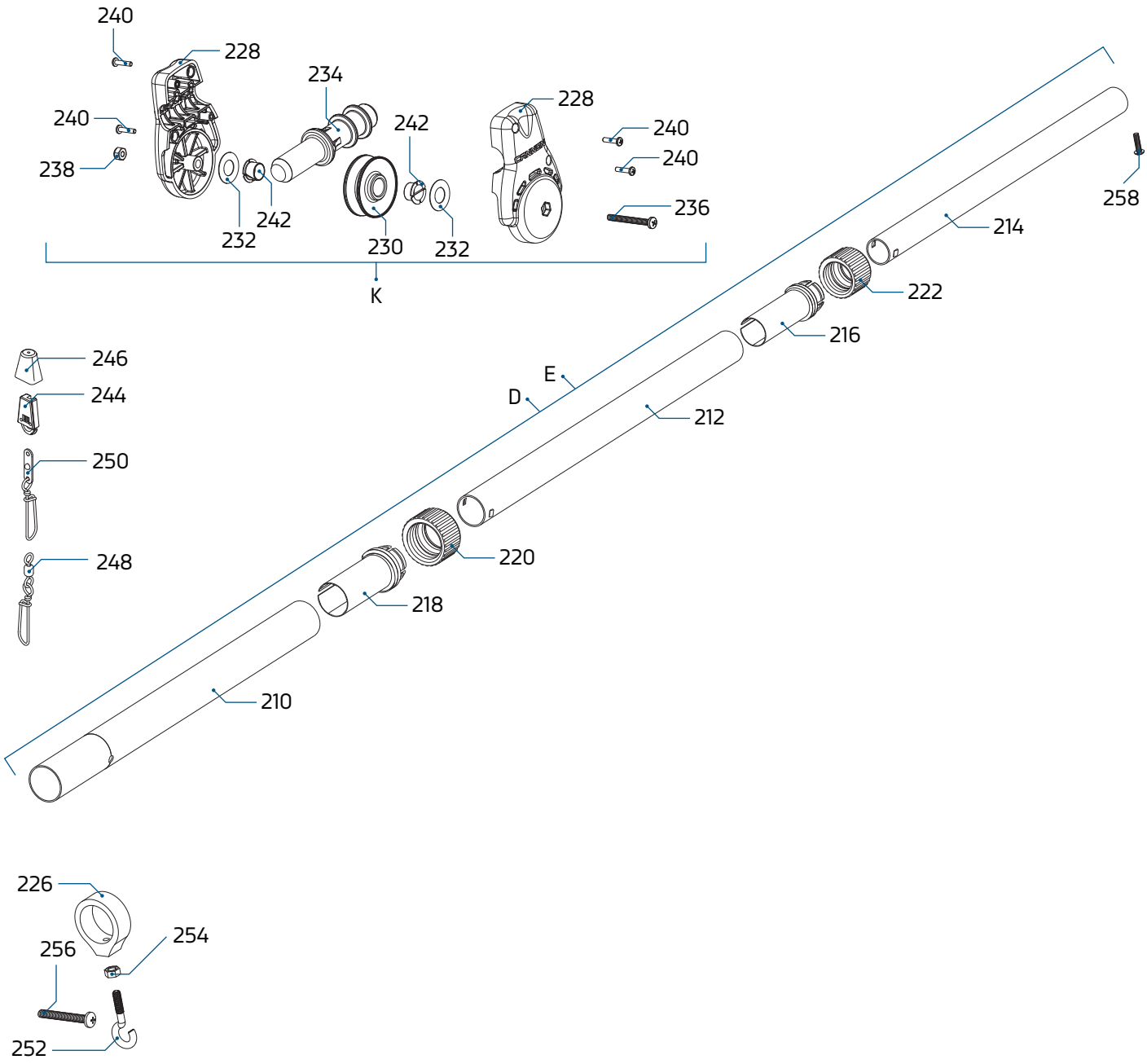

© 2020 | Johnson Outdoors Marine Electronics, Inc. | cannondownriggers.com

TELESCOPIC BOOM & BOOM END PARTS LIST

Assembly	Part #	Description	Notes	Qty.
D	3392010	ASSY, BOOM TELESCOPIC, SS	♦ *TS*	1
E	2210821	ASY BOOM TELESCOPIC		1
K	3990200	ASSY-CNN, BOOM END		1
Item	**Part #**	**Description**	**Notes**	**Qty.**
210	3392001	TUBE, BOOM, BASE, SS	♦ *TS*	1
	2290828	24" BOOM - HEAVY DUTY		1
212	3392002	TUBE, BOOM, MID, SS	♦ *TS*	1
	2290829	ASY TUBE BOOM INTER BLK		1
214	3392003	TUBE, BOOM, END, SS	♦ *TS*	1
	2290830	ASY TUBE BOOM END BLK		1
216	3393301	COLLET - MID TUBE		1
218	3393300	COLLET - BASE TUBE		1
220	2219822	HDW CLAMP BASE TUBE NEW		1
222	2219823	HDW CLAMP INTER TUBE NEW		1
224 ▲	609003	HDW CBL TIE 3 1/2 IN		1
226	3397900	BALL HOOK EXTRUSION		1
228	3392520	CASE, PULLEY		2
230	3392300	SHEEVE, PULLEY		1
232	3391507	SHIM, BOOM END		2
234	3392013	BOOM END, NEW		1
236	3393485	SCREW-#10-24X1.75 PPHMS S		1
238	3393124	NUT-#10-32 NYLOK 18-8 SS RIE		1
240	2303412	SCREW-#6-20 X 5/8 SELF TAP		4
242	3390005	BEARING-NYLINER, #8L5-1/2-F		2
244	9100100	CON TERMINATOR		1
246	9100101	CUSHION SLEEVE TERMINATOR		1
248	9100620	HDW SNAP SWIVEL 4/0-37 MARLIN		1
250	2200148	ASY SNAP & INSULATOR		1
252	9040040	HDW BOLT 1/4-20 ROLLEDTHD HOOK		1
254	2263102	NUT-HEX 1/4-20 SS 300SRS		1
256	3393461	SCREW-1/4-20 x 2" SS, PPH		1
258	2372100	SCREW-#8-18 X 5/8 THD* (SS)		1

▲ *Not shown on Parts Diagram.*
✖ *This part is included in an assembly and cannot be ordered individually.*

♦ *Only available with the Magnum TS series downrigger.*

© 2020 | Johnson Outdoors Marine Electronics, Inc. | cannondownriggers.com

REAR MOUNT ROD HOLDER PARTS DIAGRAM

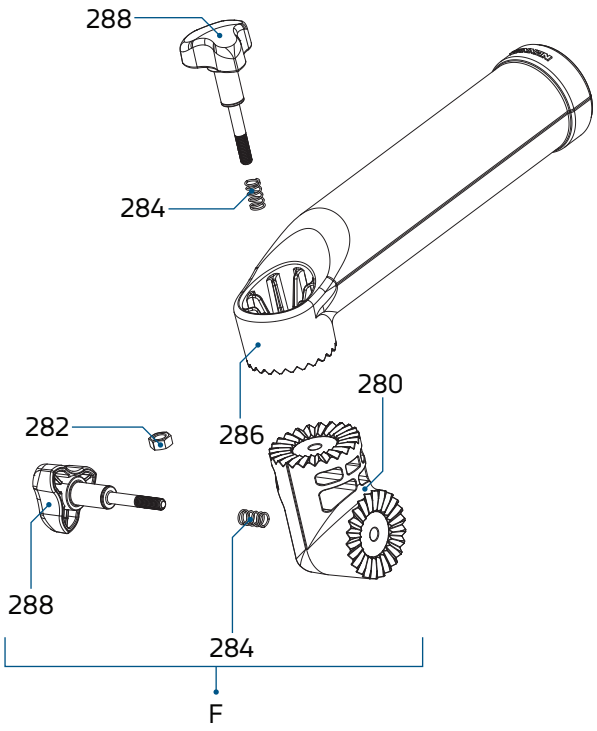

© 2020 | Johnson Outdoors Marine Electronics, Inc. | cannondownriggers.com

REAR MOUNT ROD HOLDER PARTS LIST

Assembly	Part #	Description	Notes	Qty.
F	3991904	ASSY-CNN, ROD HOLDER		1
Item	**Part #**	**Description**	**Notes**	**Qty.**
280	3394200	ARM, DUAL AXIS-ROD HLDR		1
282	✖	NUT-HEX 1/4-20 SS RIE COATED		1
284	2287002	HDW SPRING RELEASE PIN		2
286	3392033	TUBE, DUAL AXIS RD HLDR		1
288	3390101	KNOB-CANNON, SOFT GRIP		2

▲ *Not shown on Parts Diagram.*
✖ *This part is included in an assembly and cannot be ordered individually.*

♦ *Only available with the Magnum TS series downrigger.*

© 2020 | Johnson Outdoors Marine Electronics, Inc. | cannondownriggers.com

NOTES

RECOMMENDED ACCESSORIES

ROD HOLDERS & TRACK SYSTEMS

Incredible versatile rod holders, rock-solid bases and plates. It's everything you need to rig your boat up to fit the way you fish - and you can mount it all up on our track system, which features interchangeable components made of high-strength aluminum.



Dual Axis Adjustable Rod Holder



Aluminum Mount Track



Swivel Base Pedestal

MOUNTS

Rig it up and reel 'em in with a variety of mounting options suited to fit the way you fish.



Swivel Base



Deck Plate



Gimbal Mount

LINE RELEASES & WEIGHTS

We offer a wide variety of downrigger accessories designed to give you the best fishing experience:



- Uni-Line Release
- Uni-Stacker Release
- 4 to 16 lb. weights

For a complete listing of Cannon accessories, visit cannondownriggers.com.

CANNON

cannondownriggers.com

Cannon Consumer & Technical Service
Johnson Outdoors Marine Electronics, Inc.
PO Box 8129
Mankato, MN 56002-8129

121 Power Drive
Mankato, MN 56001
Phone (800) 227-6433
Fax (800) 527-4464

JOHNSON OUTDOORS

©2020 Johnson Outdoors Marine Electronics, Inc.
All rights reserved.

Part #3397130

ECN 41033

Rev J

11/20