CANNON

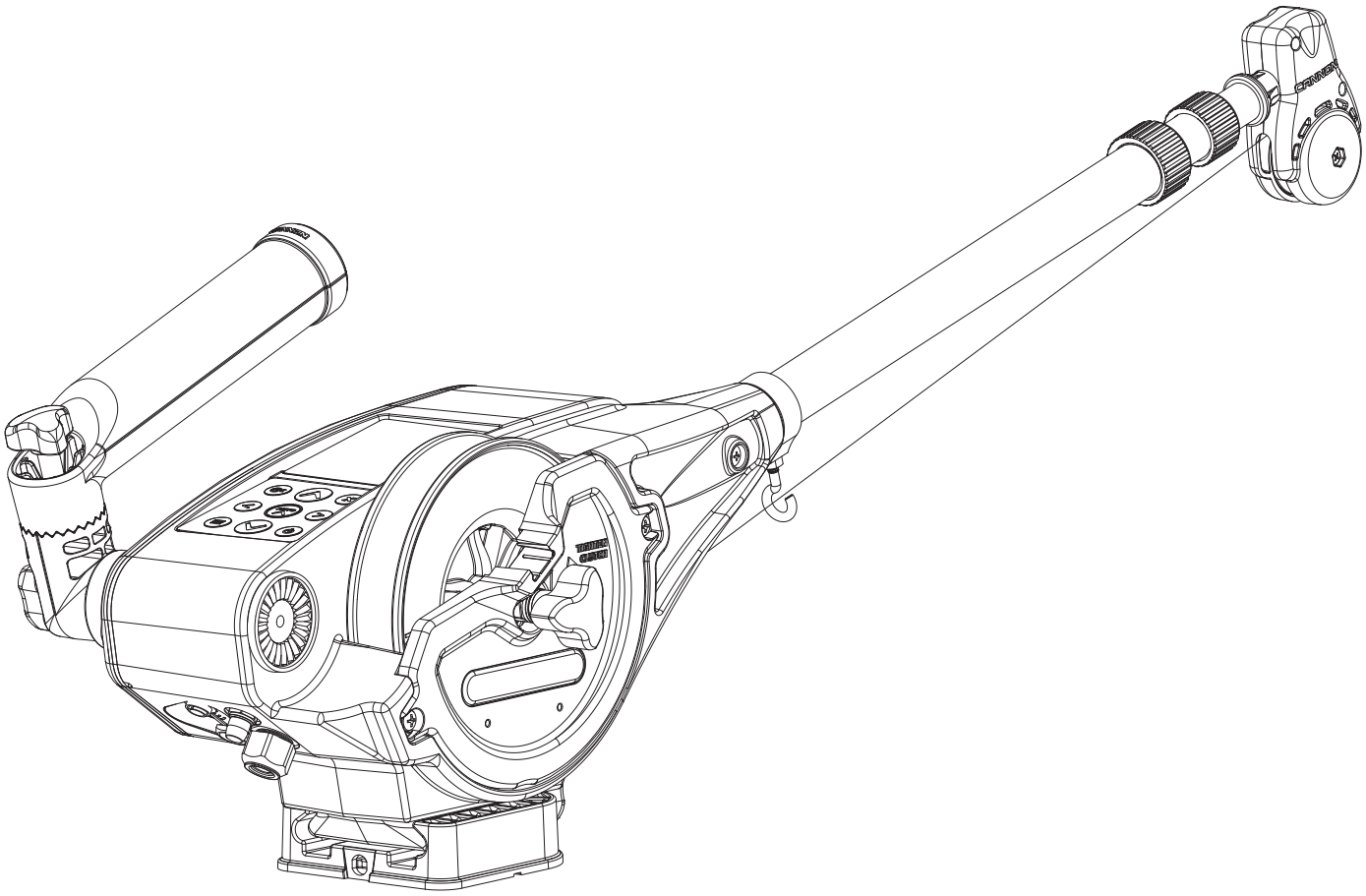

OPTIMUM™
OPTIMUM™ TS

ELECTRIC DOWNRIGGERS

Owner's Manual

INTRODUCTION

THANK YOU

Thank you for purchasing a Cannon downrigger. We have designed your new downrigger to be an accurate and reliable tool that will enhance fishing control and improve your ability to catch fish. We hope that you enjoy the use of your new downrigger and enjoy the benefit of controlled depth fishing for years to come by always following safe boating practices and laws wherever you are fishing.

REGISTRATION

Remember to keep your receipt and immediately register your downrigger. A registration card is included with your downrigger or you may complete registration on-line at cannondownriggers.com.

SERIAL NUMBER

Your Cannon 11-character serial number is very important. It helps to determine the specific model and year of manufacture. When contacting Consumer Service or registering your product, you will need to know your product's serial number. We recommend that you write the serial number down in the space provided below so that you have it available for future reference.

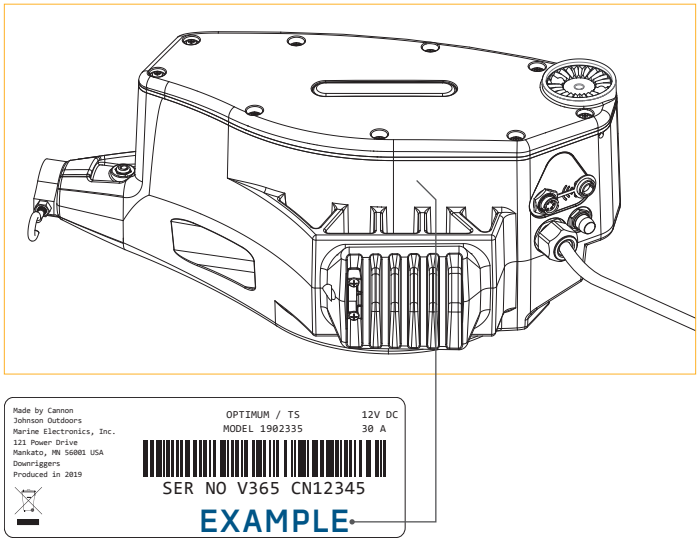

NOTICE: The serial number on your Cannon Optimum downrigger is located on the bottom of the downrigger frame. It can also be found on the About Screen within the Cannon downrigger operating system.

PRODUCT INFORMATION *(For Consumer Reference Only)*

Model: _____

Serial Number: _____

Purchase Date: _____

Store Where Purchased: _____

© 2021 | Johnson Outdoors Marine Electronics, Inc. | cannondownriggers.com

TABLE OF CONTENTS

SAFETY CONSIDERATIONS 4
WARRANTY 5
KNOW YOUR BOAT 6
FEATURES 7
INSTALLATION 8
- Installing the Optimum 8
  - Installation Parts List 8
  - Mounting Considerations 9
  - Tools and Resources Required 10
  - Installation 11
    - Installing the Base 11
    - Installing the Clutch Knob 14
    - Installing the Telescopic Boom 15
    - Installing the Swivel Head/Boom End 18
    - Terminating the Downrigger Line 19
    - Installing the Rear Mount Rod Holder 25

BATTERY & WIRING INSTALLATION 27
- Rigging & Installation Guidelines 27
- Conductor Gauge and Circuit Breaker Sizing Table . 27
- Recommendations for Maintaining Boat's Electrical Condition 28
- Electrical Specifications & Wiring Instructions 28
- Connecting to the Battery 29
- Powering Multiple Downriggers 29
- Additional Considerations 30

WIRING DIAGRAM 31
SETUP GUIDE 32
- Setting Up the Optimum 32
  - Downrigger Keypad 32
  - Setup Guide 33

DEFAULT SETTINGS 34
- Optimum Default Settings 34

CONNECTING THE DOWNRIGGER 35
- Networking the Optimum 35
- The Bluetooth Optimum and Optimum TS Network 35
- The Master Downrigger 36
- The Client Downriggers(s) 36
- The Cannon Transducer 36
- A Mobile Device 36
- The Fish Hawk X4D System 36
- A Humminbird Fish Finder 36
- Pairing a Device to a Single Downrigger 37
- Pairing Two Downriggers Together 40
- Pairing the Master Downrigger to a Humminbird ... 43
- Pairing the Master Downrigger to a Fish Hawk 44
- Forgetting a Downrigger on a Device 45
- Forgetting a Device, Humminbird, Fish Hawk or Downrigger on a Downrigger 46
- Clearing the Downrigger Network 47
- Clearing the Master Downrigger from the Client Downrigger 48
- Updating the Cannon app & Downriggers in a Network 49

FISHING WITH THE DOWNRIGGER 51
- Connecting the Cannon Transducer 51
- Attaching the Snap Assembly with Insulator 52
- Attaching a Line Release 53
- Safe Transport 54

USING THE DOWNRIGGER 55
- Controlling the Optimum and Optimum TS 55
- Waterline Zero 55
- Preset Depths & Last Depth Recall 56
- Bottom Tracking 59
- Depth Cycling 63
- Positive Ion Control 70
- Short Stop 72
- Soft Stop 72

BLOWBACK CALCULATIONS 73
- Blowback 73

VIEWS & VIEW MENU 74
- Views 74

SETTINGS MENU 79
- Settings Menu 79
- Downrigger Menu 80
- Sonar Menu 81
- Preferences Menu 82
- Bluetooth Menu 83
- Views Menu 84
- About Menu 86
- Power Menu 87

OPTIMUM - THE CANON APP 88
- The Cannon App 88
- Navigating the Cannon App 88

SERVICE & MAINTENANCE 99
- Attaching the Crank Handle Assembly 99
- Removing the Spool Cover and Replacing the Spool 100
- Replacing the Clutch Pad 102
- Cable Replacement 103
- Adjusting the Length of the Telescopic Boom 104
- Troubleshooting & FAQ's 105
- For Further Troubleshooting and Repair 108

COMPLIANCE STATEMENTS 109
- Environmental Compliance Statement 109
- WEEE Directive 109
- Disposal 109
- Optimum Regulatory Compliance Information 109
- FCC Compliance 110
- Industry Canada Compliance 110
- Environmental Ratings 110
- Radio Operation 110
- Trademarks 110

PARTS DIAGRAM & PARTS LIST 111

© 2021 | Johnson Outdoors Marine Electronics, Inc. | cannondownriggers.com

SAFETY CONSIDERATIONS

Please thoroughly read this user manual. Follow all instructions and heed all safety and cautionary notices below. Use of this downrigger is only permitted for persons that have read and understood these user instructions. Minors may use this product only under adult supervision. Save these instructions.

⚠ WARNING

You are responsible for the safe and prudent operation of your vessel. We have designed your Cannon product to be an accurate and reliable tool that will enhance boat operation and improve your ability to catch fish. This product does not relieve you from the responsibility for safe operation of your boat. You must avoid hazards to navigation and always maintain a permanent watch so you can respond to situations as they develop. You must always be prepared to regain manual control of your boat. Learn to operate your Cannon product in an area free from hazards and obstacles.

⚠ WARNING

It is recommended to only use Johnson Outdoors approved accessories with your Cannon. Using non-approved accessories including those used to mount or control your product may cause damage, unexpected operation and injury. Be sure to use the product and all approved accessories, including remotes and/or devices, safely and in a manner directed to avoid accidental or unexpected operation. Keep all factory installed parts in place including motor, electronic and accessory covers, enclosures and guards. Failure to adhere to this warning may affect your warranty.

⚠ WARNING

Do not touch the Spool/Reel while the downrigger is in use. Holding or touching it may result in moderate to severe injuries.

© 2021 | Johnson Outdoors Marine Electronics, Inc. | cannondownriggers.com

WARRANTY

CANNON® LIMITED WARRANTY

Johnson Outdoors Marine Electronics, Inc. ("JOME") extends the following limited warranty to the original retail purchaser only. Warranty coverage is not transferable.

CANNON® LIMITED LIFETIME WARRANTY

JOME warrants to the original purchaser that if the accompanying product (see exclusions below) proves to be defective in material or workmanship within the following warranty periods, JOME will, at its option, either repair or replace same without charge (but no cash refunds will be made):

The boom, motor (if applicable), and reel, plus all plastic parts, including but not limited to frames and bases, will be free from defects in materials and workmanship, subject to normal wear and tear, for the original purchaser's lifetime.

All other items will have 1-year limited warranties from the date of original retail purchase, except THE FOLLOWING ITEMS THAT HAVE NO WARRANTY: swivel lock pin, weights, and wire cable.

LIMITATION AND EXCLUSION OF IMPLIED WARRANTIES AND CERTAIN DAMAGES

THERE ARE NO EXPRESS WARRANTIES OTHER THAN THESE LIMITED WARRANTIES. JOME DISCLAIMS LIABILITY FOR INCIDENTAL AND CONSEQUENTIAL DAMAGES, AND IN NO EVENT SHALL ANY IMPLIED WARRANTIES (EXCEPT ON THE BOOM, MOTOR, REELS, AND ALL PLASTIC PARTS), INCLUDING ANY IMPLIED WARRANTY OF MERCHANTABILITY OR FITNESS FOR PARTICULAR PURPOSE, EXTEND BEYOND ONE YEAR FROM THE DATE OF PURCHASE (AND IN THE CASE OF THE SWIVEL LOCK PIN, WEIGHTS, AND WIRE CABLE, JOME DISCLAIMS ALL IMPLIED WARRANTIES). THIS WRITING CONSTITUTES THE ENTIRE AGREEMENT OF THE PARTIES WITH RESPECT TO THE SUBJECT MATTER HEREOF; NO WAIVER OR AMENDMENT SHALL BE VALID UNLESS IN WRITING SIGNED BY JOME.

Some states do not allow limitations on how long an implied warranty lasts or the exclusion or limitation of consequential damages, so the above limitation or exclusion may not apply to you. This warranty gives you specific legal rights, and you may also have other rights that vary from state to state.

CANNON® SERVICE POLICY

AFTER THE APPLICABLE WARRANTY PERIOD

After the applicable warranty period, or, if one of the above exclusions applies, Cannon® products will be repaired for a charge of parts plus labor. All factory repairs, after the applicable warranty period, carry a 90-Day Limited Warranty, subject to the exclusions and limitations stated above.

TO ENFORCE WARRANTY OR TO OBTAIN REPAIRS AFTER WARRANTY

To obtain warranty service in the U.S., the downrigger believed to be defective and the proof of original purchase (including the date of purchase) must be presented to a Cannon® Authorized Service Center or to Cannon®'s factory service center in Mankato, MN. Except as noted below, any charges incurred for service calls, transportation or shipping/freight to/from the Cannon® Authorized Service Center or Cannon®'s factory, labor to haul out, remove, re-install or re-rig products for warranty service, or any similar items are the sole and exclusive responsibility of the purchaser. Warranty service can be arranged by contacting a Cannon® Authorized Service Center or by contacting the factory at 1-800-227-6433 or by email to service@cannondownriggers.com. If the necessary repairs are covered by the warranty, we will pay the return shipping charges to any destination within the United States. Downriggers purchased outside of the U.S. (or parts of such downriggers) must be returned prepaid with proof of purchase (including the date of purchase and serial number) to any Authorized Cannon® Service Center in the country of purchase.

NOTICE: Do not return your Cannon® downrigger or parts to your retailer. Your retailer is not authorized to repair or replace them.

Major parts, such as the motor and main frame, must be returned to JOME in Mankato, Minnesota, or a Cannon® Authorized Service Center, for repair or replacement. To reduce shipping costs, we suggest removal of loose parts such as the boom and rod holders. Small parts that can be easily removed such as the handle and/or the counter, may be removed from the downrigger and returned for repair or replacement. **Retain your sales receipt.** Proof of purchase must accompany product when returned.

RETURN ADDRESS:

Johnson Outdoors Marine Electronics, Inc.
Attn: Cannon Service Dept.
121 Power Drive
Mankato, MN 56001

KNOW YOUR BOAT

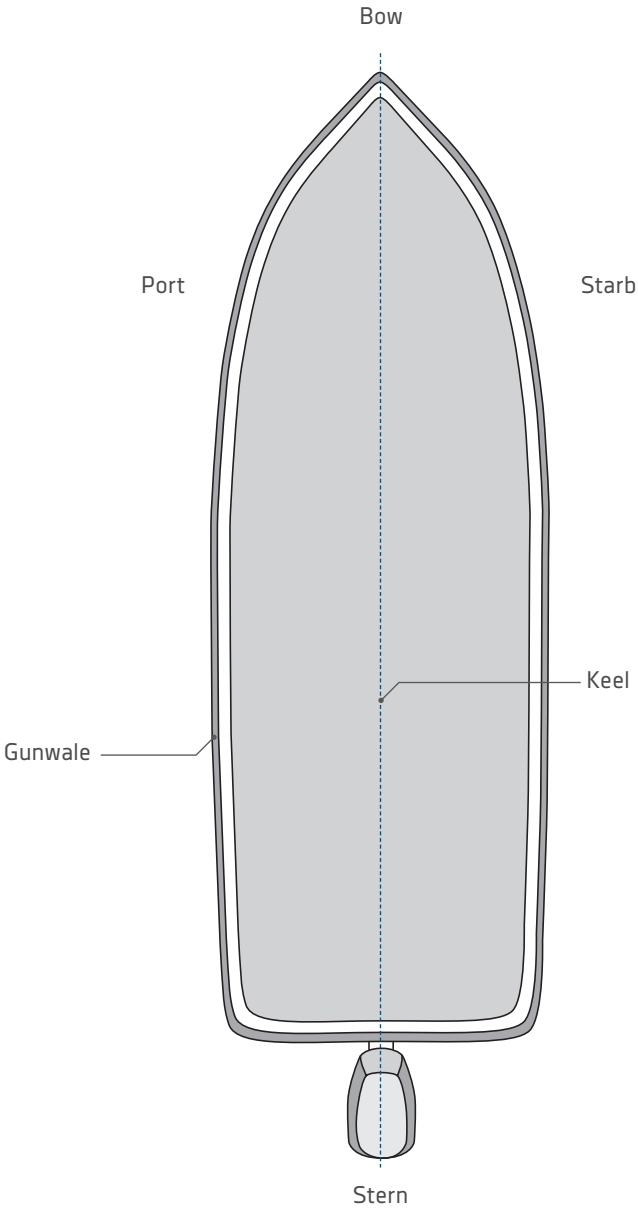

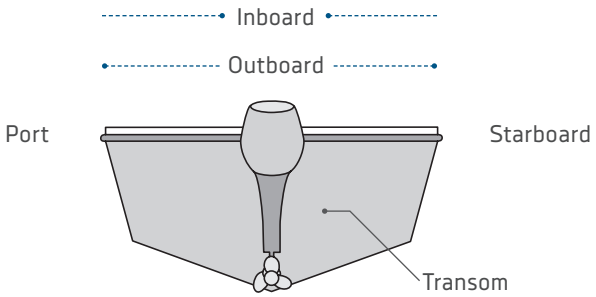

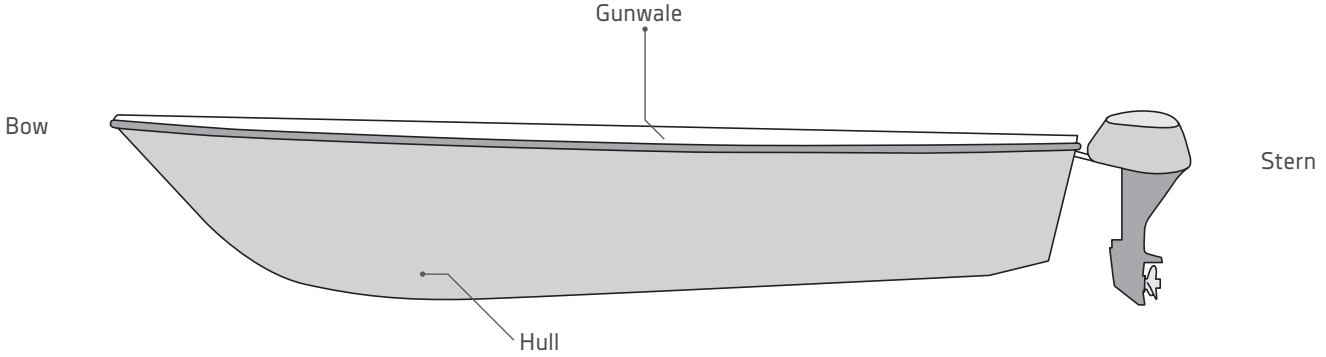

© 2021 | Johnson Outdoors Marine Electronics, Inc. | cannondownriggers.com

FEATURES

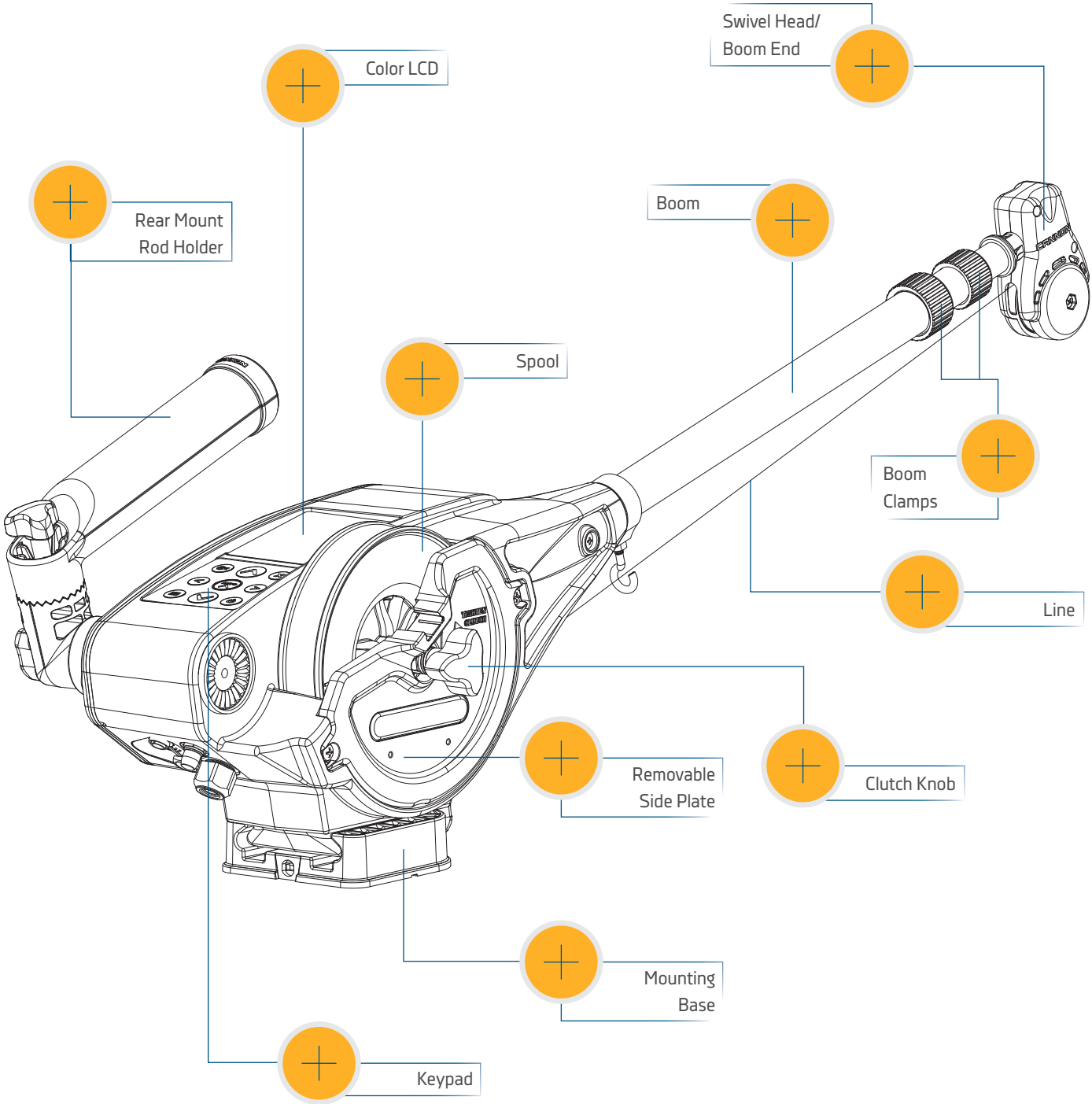

NOTICE: Specifications subject to change without notice. This diagram is for reference only and may differ from your actual downrigger.

INSTALLATION

INSTALLING THE OPTIMUM™

Your new Cannon Optimum comes with the hardware you'll need to directly install it to the boat. Cannon recommends mounting your downrigger using a deck plate and also offers a variety of accessories to customize your installation. Read these installation instructions to learn more and visit cannondownriggers.com for a full list of accessories. To install the downrigger directly to the boat, please follow the instructions provided in this manual. Please review the parts list, mounting considerations and tools needed for installation prior to getting started. For additional product support, please visit cannondownriggers.com.

INSTALLATION PARTS LIST

Item / Assembly	Part #	Description	Qty.
A	✖	CANNON DOWNRIGGER ASSEMBLY	1
B	3991913	CNN ASSY, SWIVEL BASE	1
C	3991930	ASSY-CNN, MNT BASE	1
D	3392010 ♦	ASSY, BOOM TELESCOPIC, SS *TS*	1
E	2210821	ASY BOOM TELESCOPIC	1
F	3991904 ✚	ASSY-CNN, ROD HOLDER	1/2
G	3994807	ASSY-BAG, DT PRO/MAG ST	1
H	3994815	BAG ASSY, BOOM END	1
J	2277002	ASY HDW RELEASE UNIVERSAL	2
S	2200109 ♦	SALTWATER RELEASE, OR8 BE *TS*	2
2	9280720	HDW SCR 1/4 20X2 TRUSS HD PHIL	4
4	2371712	WASHER-FLAT 9/32 X 5/8 X 1/16	4
6	2263103	NUT-1/4-20 NYLOCK SS	5
8	9280713	HDW SCR 1/4 20X1 1/2 TRUSS HEA	4
10	3390103	KNOB, SOFT GRIP, CLUTCH	1
12	2263102	NUT-HEX 1/4-20 SS 300SRS	1
14	9040040	HDW BOLT 1/4-20 ROLLEDTHD HOOK	1
16	3393461	SCREW-1/4-20 x 2" SS, PPH	1
18	3397900	BALL HOOK EXTRUSION	1
20	3390101	KNOB-CANNON, SOFT GRIP	2/4
22	2287002	HDW SPRING RELEASE PIN	2/4
24	3392033	TUBE, DUAL AXIS RD HLDR	1/2
26	3394200	ARM, DUAL AXIS-ROD HLDR	1/2
28	2372100	SCREW-#8-18 X 5/8 THD* (SS)	1
30	9100101	CUSHION SLEEVE TERMINATOR	1
32	9100100	CON TERMINATOR	1
34	2200148	ASY SNAP & INSULATOR	1
36	9100620	HDW SNAP SWIVEL 4/0-37 MARLIN	1
K	3990200	ASSY-CNN, BOOM END	1
40	3390910	HANDLE-CRANK, MANUAL	1
42	3397138 ▲	INSTRCT, INSTALL, OPTIMUM	1
44	3397139 ▲	MANUAL DISCLAIMER DWNLOAD INFO	1
46	3397150 ▲	QUICK REF. GUIDE, OPTIMUM	1

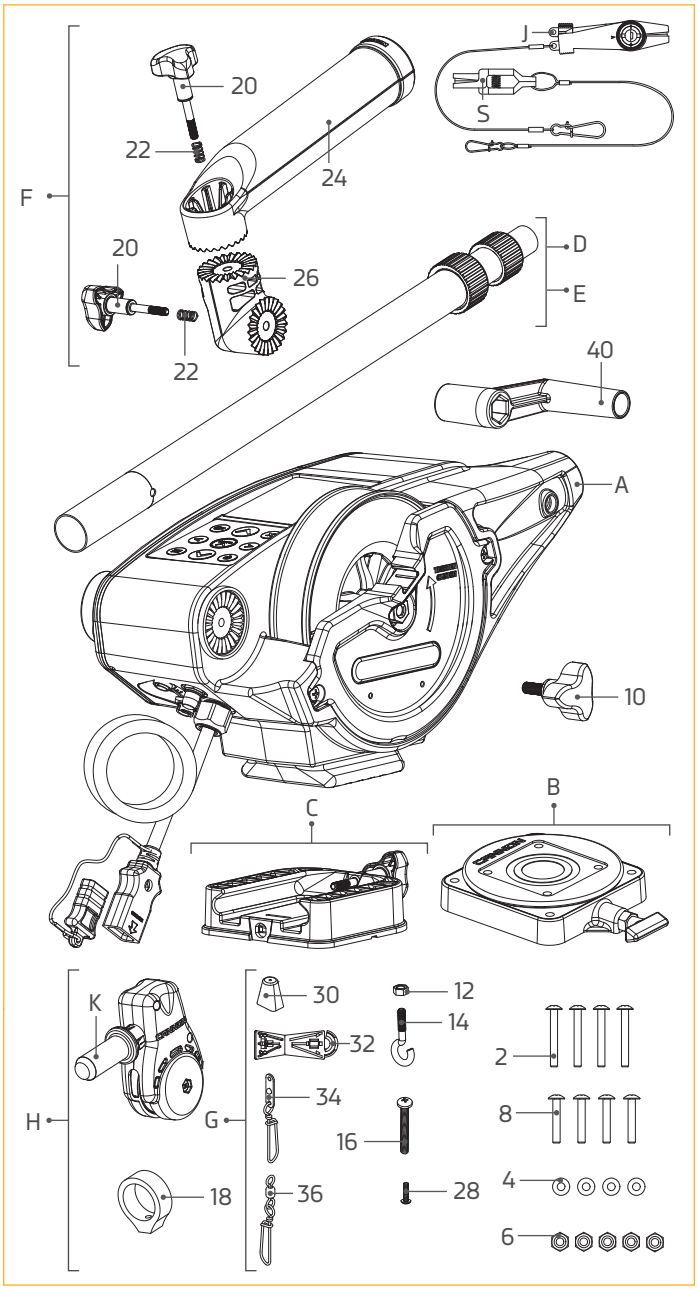

▲ *Not shown on Parts Diagram.*
✖ *This part is included in an assembly and cannot be ordered individually.*
✚ *Only one assembly is available with the tournament Cannon Optimum TS.*

♦ *Only available with the Optimum TS series downrigger.*

© 2021 | Johnson Outdoors Marine Electronics, Inc. | cannondownriggers.com

MOUNTING CONSIDERATIONS

Before mounting a Cannon downrigger, please give consideration to the following:

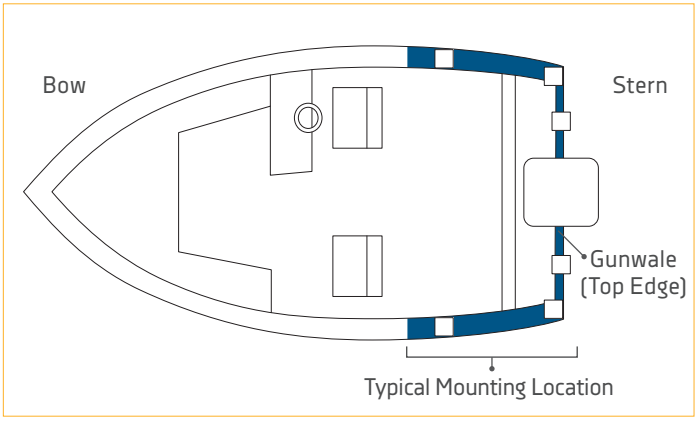

1. **Clear mounting location** - Choose a good location on your boat to mount your downrigger. Downriggers are mounted to the Gunwale of the boat. Make sure the area under the mounting location is clear to drill holes and install nuts and washers. Make sure that the mounting location is free from cables or wiring and other critical boat structures. The movable parts of the downrigger, such as the telescopic boom should be positioned so that the weight is far enough beyond the edge of the boat so that it and the downrigger will not encounter any obstructions during operation. In some cases, the profile of the Gunwale is raised which may prevent the downrigger from sitting all the way against the face of the Gunwale. It may be necessary to shim or cut away around these areas to securely complete the installation. Mounting accessories are recommended to accommodate difference in mounting locations and mounting situations.

2. **Operation of the downrigger** - Consider the operation of the downrigger at the selected mounting location. A downrigger should be mounted in a location where it is easy to observe your fishing rod and react quickly to operate the downrigger once there is a fish on the line. There should be enough space to use the downrigger comfortably and with proper ergonomics. It should be easy to reach while still maintaining control of the boat and to retrieve gear. The location of the telescopic boom, weight and rod holder when fully installed should not encounter obstructions. The power cables should reach their intended power source from the mounting location. When installing multiple downriggers, consider the spacing between downriggers units. Mount the downrigger in a location where it is easy to route transducer cables and other downrigger accessory cables and wiring, either to a power source or sonar unit. Make sure that the mounting location does not create a tripping hazard for power cables or accessories used during operation.

3. **Mounting accessories** - Consider the use of a mounting accessory when installing your downrigger. Consider the location and angle of the rod placement when the downrigger is fully installed on the mounting surface. A deck plate is recommended to provide adequate support and to maximize the capability of the product. Cannon offers a complete line of mounting accessories that allow you to optimize your installation to fit the way you fish. Before making any permanent changes to your boat, consider what accessories might be used in your application. To see the complete line of mounting accessories review the variety of accessories explained in this document or visit cannondownriggers.com.

NOTICE: When using the telescopic boom, we strongly recommend the use of a deck plate on all boats to provide adequate stability for the downrigger.

INSTALLING THE OPTIMUM

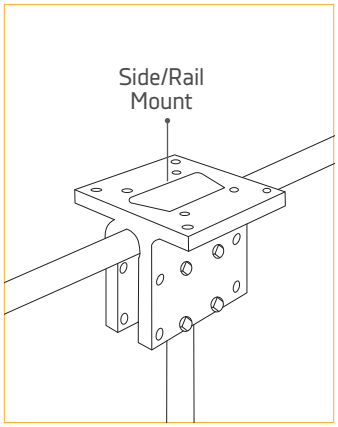

SIDE/RAIL MOUNTS
Can be mounted to a welded T-section. Side/Rail Mounts *(Item No. 2250940)* can also be used at the two rail section butt joint. In both installations it is recommended to use a non-slip material, such as rubber or a thin wood sheet, between metal surfaces.

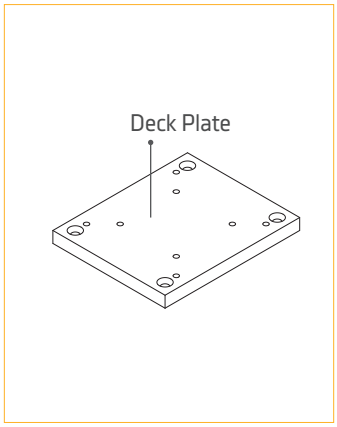

DECK PLATES
Cannon deck plates prevent deflection and add stability to decks. Recommended for attaching the downrigger for initial installation or for mounting accessories. They are necessary to add extra strength to the base material of the boat. Options include Deck Plate *(Item No. 2200693)*.

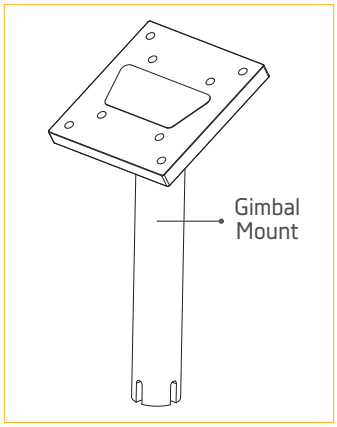

GIMBAL MOUNTS
Designed to fit medium-sized flush mounted rod holders built into the gunwale of larger fishing boats and cruisers. Only sturdy, high quality rod holders should be used for this temporary mounting system. Gimbal mounts are available in 9" or 12" post lengths with Standard *(Item No. 2250927 and 2250928)* and Stainless Steel options *(Item No. 1903005 and 1903006)*.

TOOLS AND RESOURCES REQUIRED

- 9/32" Drill Bit
- Pencil, Marker or similar Marking Tool
- Drill
- 7/16" Box End Wrench
- Wire Cutters
- Pliers
- #3 Phillips Screw Driver
- Needle Nose Pliers
- Masking tape
- Anti-seize
- A second person to help with the installation

© 2021 | Johnson Outdoors Marine Electronics, Inc. | cannondownriggers.com

INSTALLATION

INSTALLING THE BASE

1

Item(s) needed:

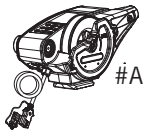 #A x 1

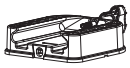 #C x 1

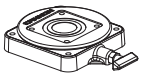 #B x 1

a. Review the mounting considerations at the beginning of the installation and select a mounting location. Make sure the downrigger is not connected to a power source.

⚠ WARNING

Make sure the downrigger is not connected to a power source.

b. Take the Mounting Base (Assembly #C) and attach it to the Downrigger Assembly (Assembly #A). The Mounting Base is keyed with the bottom of the Downrigger Assembly. The Soft Grip Knob on the Mounting Base screws into a metal plate on the bottom of the Downrigger Assembly. Secure the Mounting Base to the Downrigger Assembly so that the Soft Grip Knob is in the correct position.

c. In the final Installation, the Mounting Base is installed on the Swivel Base (Assembly #B). If desired, hold the Downrigger Assembly (Assembly #A) with the Swivel Base at the selected mounting location to check fit and function. Use a second person to help with the installation and test to make sure that the downrigger will operate as desired.

d. Determine if a mounting accessory, such as a recommended deck plate is needed. Refer to the installation instructions included with any mounting accessory and then complete the downrigger installation.

NOTICE: This downrigger weighs approximately 19 lbs. We recommend having a second person help with the installation.

NOTICE: The Release Knob on the Swivel Base can face any direction for your final installation.

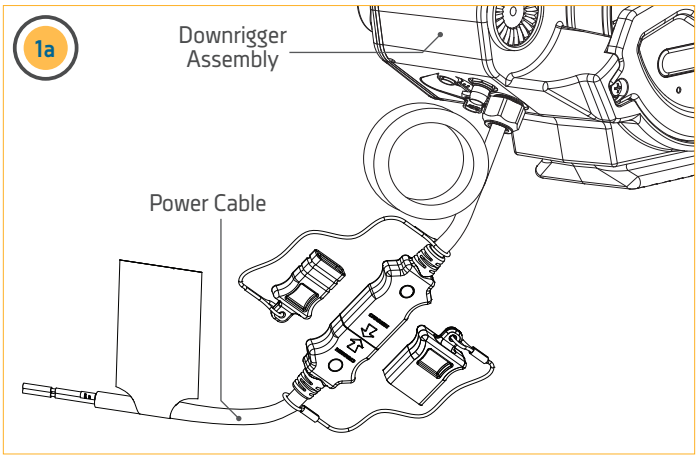

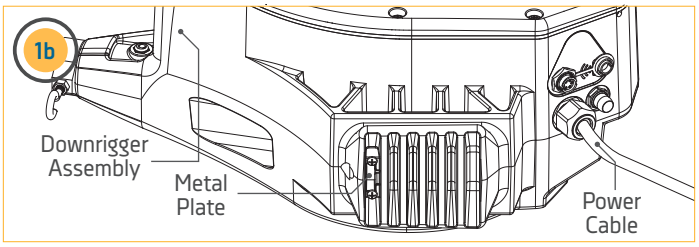

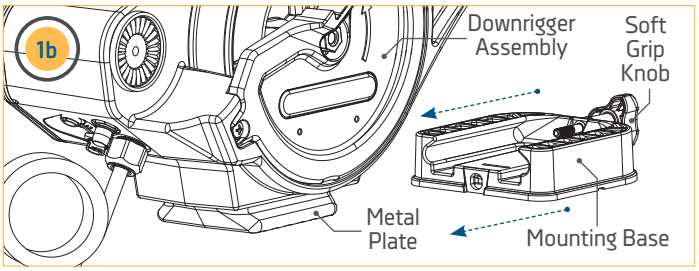

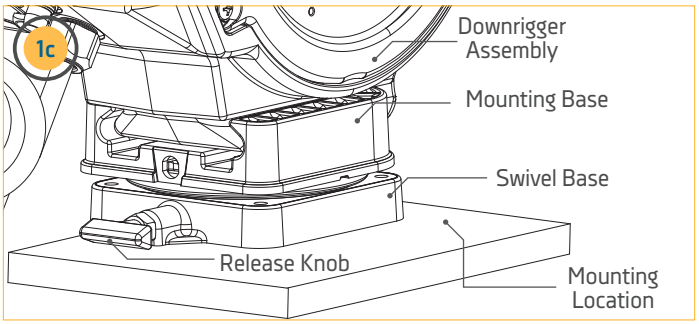

INSTALLING THE BASE

2

e. Once satisfied with the selected location, begin by using the Swivel Base as a mounting template.

f. Take the Swivel Base and place it at the desired location. Make sure that the Release Knob is orientated in the desired direction and the mounting location is clear to drill holes and can accommodate mounting hardware.

g. With the Swivel Base in place, use a pencil, marker, or similar marking tool to mark the location of the 4 mounting holes on the mounting location.

NOTICE: When drilling holes, it is helpful to first cover the surface with masking tape. This will help keep the boat surface unmarked and help with cleanup. Cover the surface and then mark the location to drill. Once the pilot holes are drilled remove the masking tape before continuing installation.

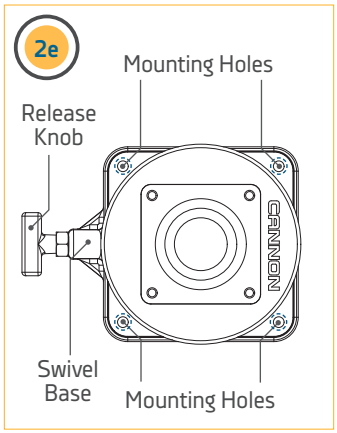

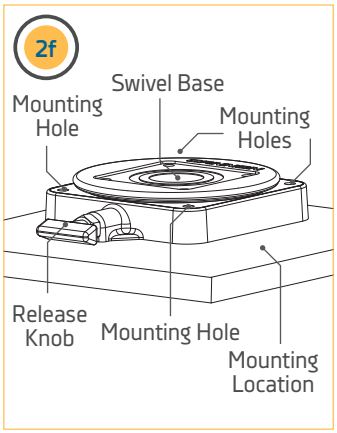

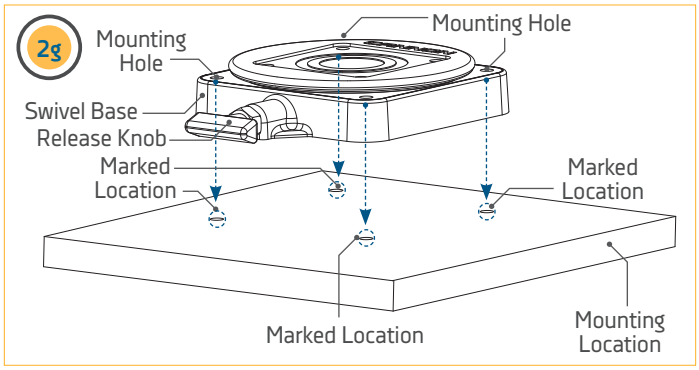

3

h. With the location marked, set the Swivel Base aside and drill holes, one in each of the four marked locations using a Drill with a 9/32" Drill Bit.

i. Return the Swivel Base to the mounting location and align it with the four drilled holes. Orientate it back in the desired direction so the mounting holes in the Swivel Base align with the drilled holes in the mounting location and the Release Knob in the desired direction.

NOTICE: Mounting the Swivel Base is optional. If it is preferred to use the Mounting Base only, use the mounting base as a template for drilling holes. To secure the Mounting Base to the deck use four 1/4-20 X 2" Phillips Truss Head Machine Screws (Item # 2) four Flat Washers (Item #4) and four 1/4-20 Nylock Nuts (Item # 6).

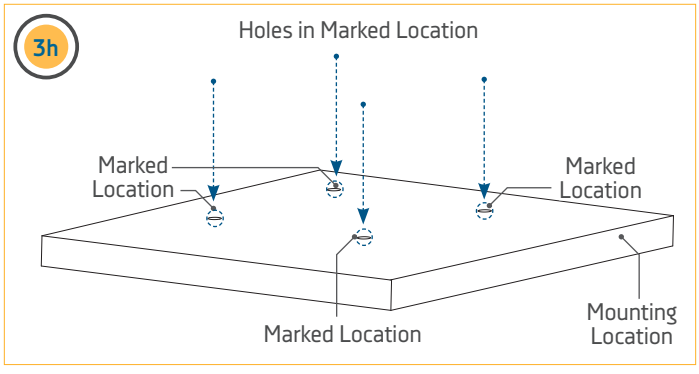

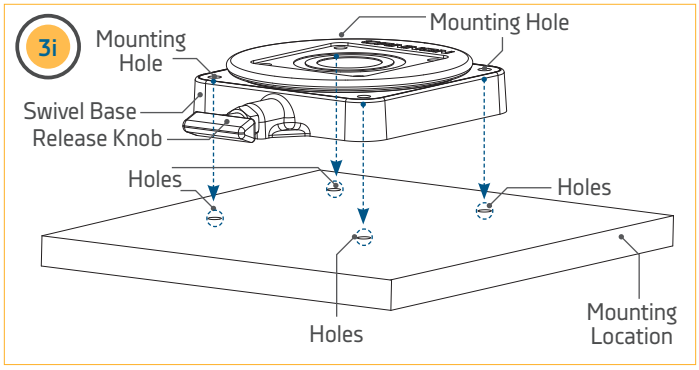

© 2021 | Johnson Outdoors Marine Electronics, Inc. | cannondownriggers.com

4

Item(s) needed:

#2 x 4 #4 x 4 #6 x 4

j. Take four of the 1/4-20 X 2" Phillips Truss Head Machine Screws (Item # 2) and apply anti-seize. Then place one in each of the Mounting Holes. The Truss Screws should pass through the Swivel Base and the drilled holes in the mounting location.

k. Secure the Truss Screws in place with four Flat Washers (Item #4) and four 1/4-20 Nylock Nuts (Item # 6). Take one Flat Washer and place it on the end of each Truss Screw. Secure each Truss Screw and Flat Washer with Nylock Nuts using a #3 Phillips Screwdriver. Hand tighten, or tighten to 45 ft-lbs. To prevent seizing of the stainless steel hardware, do not use high speed installation tools.

NOTICE: To prevent seizing of the stainless steel hardware, do not use high speed installation tools. Wetting the screws or applying an anti-seize may help prevent seizing.

NOTICE: Consider installing an optional Cannon Lock on the Mounting Base for added security. *(Item No. 1903020)*

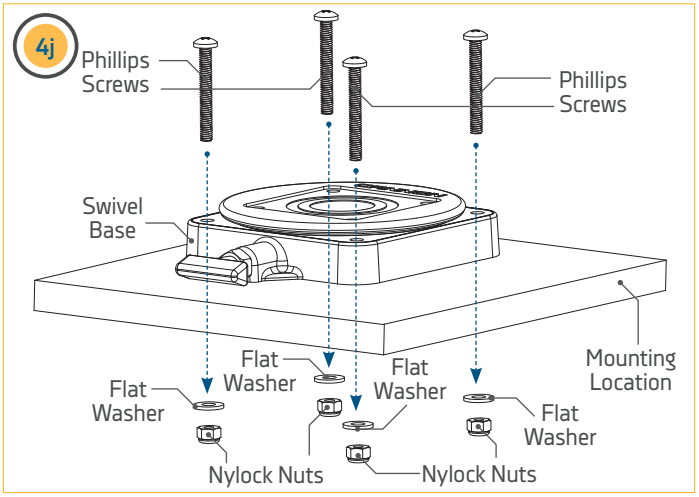

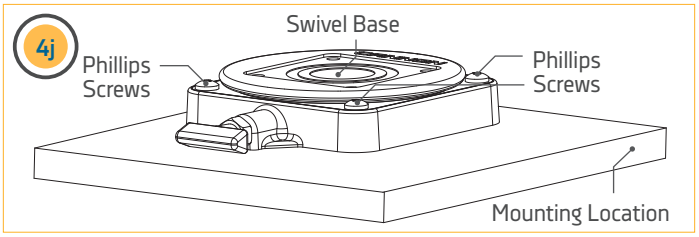

5

Item(s) needed:

#8 x 4

l. The Mounting Base will be installed to the Swivel Base. At the beginning of the installation, the Mounting Base was attached to the Downrigger Assembly. Recall the orientation of the Soft Grip Knob and the orientation of the Downrigger Assembly in its intended installation position.

m. Remove the Mounting Base from the Downrigger Assembly and place it back on the Swivel Base in the same orientation. The mounting holes in the corners of both the Swivel Base and Mounting Base should align. Take four of the 1/4-20 X 1 1/2" Truss Head Screws (Item # 8) and use them to secure the Mounting Base to the Swivel Base using a Phillips screwdriver.

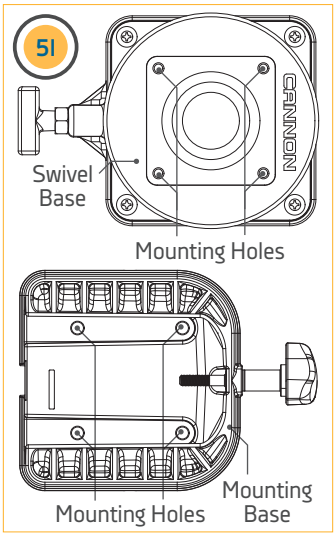

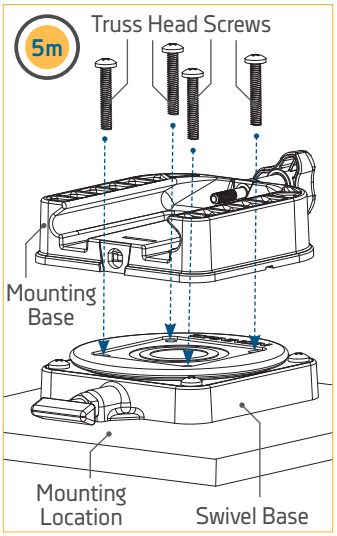

INSTALLING THE CLUTCH KNOB

6

n. Once the bases are secured together, replace the Downrigger Assembly on the Mounting Base and secure it with the Soft Grip Knob. Hand tighten.

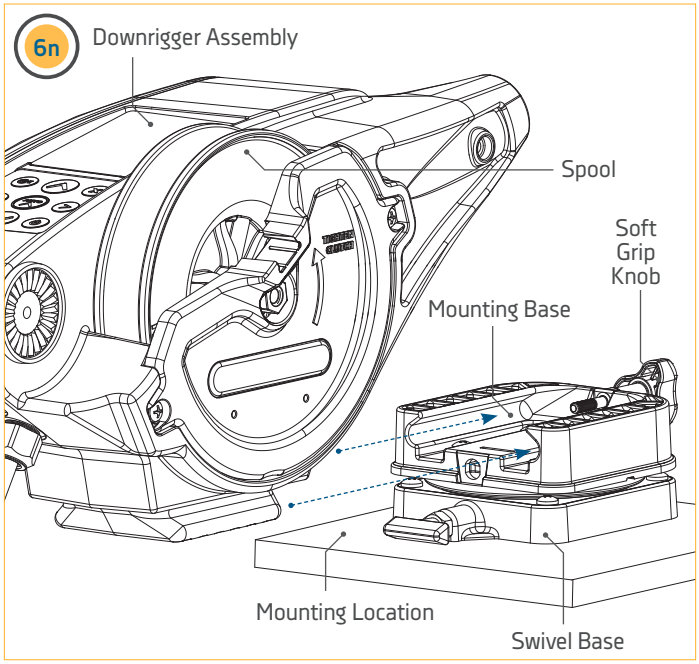

INSTALLING THE CLUTCH KNOB

1

Item(s) needed:


#10 x 1

a. Take the Clutch Knob (Item #10) and install it into the side of the Downrigger Assembly. The Clutch Knob is installed on the side of the downrigger where the Spool is located. When installing the Clutch Knob, insert it into the center of the downrigger spool and turn it counterclockwise to tighten.

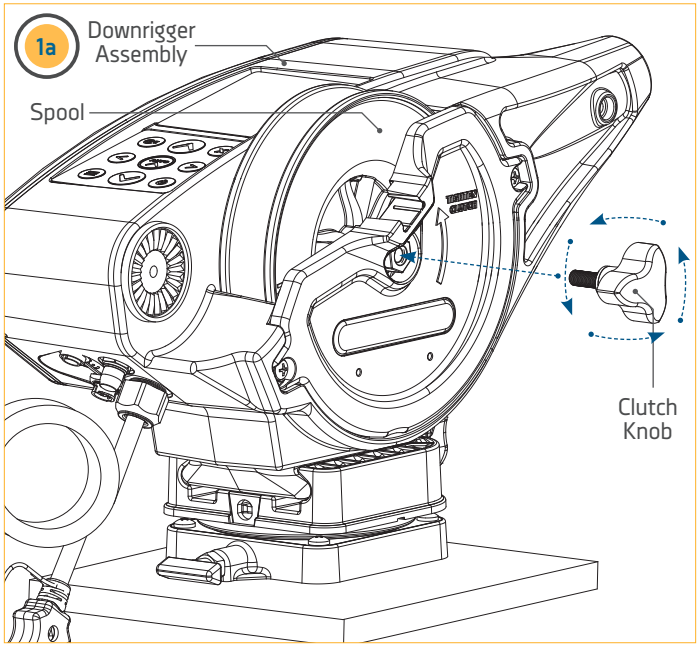

© 2021 | Johnson Outdoors Marine Electronics, Inc. | cannondownriggers.com

INSTALLING THE TELESCOPIC BOOM

1

Item(s) needed:

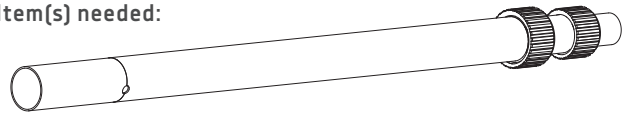

#D x 1 or #E x 1

a. Take the Telescopic Boom (Assembly #D or Assembly #E) and cut the Cable Tie holding the three tubes of the boom together with a wire cutter or cutting tool. Remove the cut Cable Tie and loosen the Boom Clamps by turning them counterclockwise at the narrow end of the Telescopic Boom.

b. The Outer Tube that makes up the wider end of the Telescopic Boom has 3 holes used for mounting it to the Downrigger Assembly. The tubes in the Telescopic Boom need to be extended so that the holes used to mount the boom to the downrigger are unobstructed and are free to pass a bolt through.

c. With the Clamps on the Telescopic Boom loosened, the tubes of the boom can slide apart. Slide the Center Tube about 2 inches out from the original position and then re-tighten the Boom Clamp towards the narrower end of the boom turning clockwise. Slide the Middle Tube about 2 inches out from its original position and tighten the second clamp. Check the opposite end of the boom to see if all three holes on the Outer Tube are clear to pass mounting hardware. If not, re-adjust the Boom Clamps and tubes to expose the mounting holes. Secure the clamps by turning them clockwise so that the tubes do not slide, then set aside.

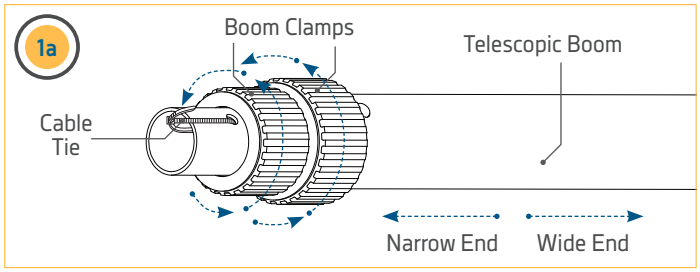

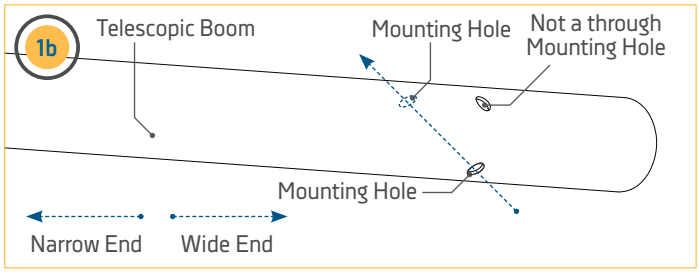

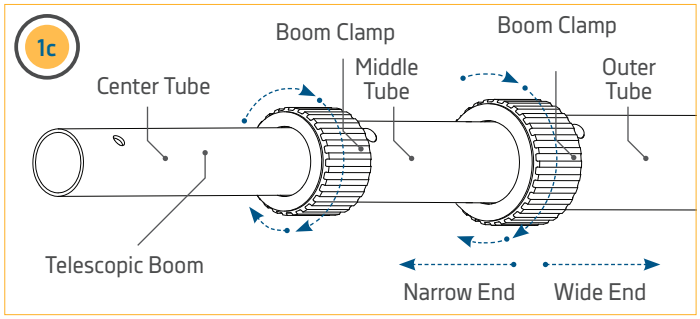

2

Item(s) needed:

#12 x 1



#14 x 1

d. Take the Ball Hook (Item #14) and place the Stainless Steel Hex Nut (Item #12) on it. Turn the Hex Nut far onto the Ball Hook, nearly to the end of the threads. Set the Ball Hook Assembly aside.

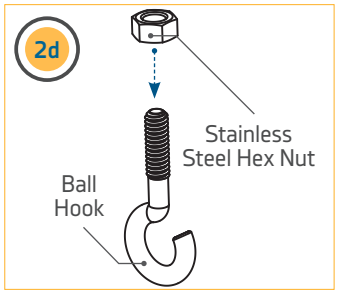

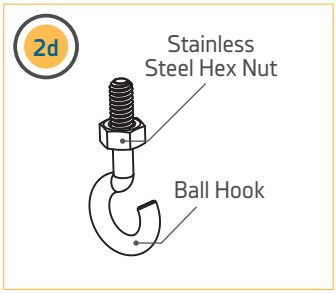

© 2021 | Johnson Outdoors Marine Electronics, Inc. | cannondownriggers.com

INSTALLING THE TELESCOPIC BOOM

3

Item(s) needed:

#18 x 1

e. Take the Ball Hook Extrusion (Item #18) and place it over the wider end of the Telescopic Boom, opposite the Clamps. At this point on the installation, the Ball Hook Extrusion will slide freely on the Telescopic Boom.

f. Take the Telescopic Boom with the Ball Hook Extrusion and note the location of the three holes on the wide end of the boom. The two holes across from each other will be used to secure it to the Downrigger Assembly. The two holes are aligned so that hardware can pass straight through to secure it to the Downrigger Assembly. Place it into the end of the Downrigger Assembly and rotate the holes so that the mounting holes in the Boom Assembly are aligned with the mounting holes in the Downrigger Assembly.

NOTICE: If preferred, rotate the Boom Assembly so that the plastic protrusion toward the Narrow End of the boom, next to the Boom Clamp, is rotated downward. This is a cosmetic preference and will not affect the operation of the Boom.

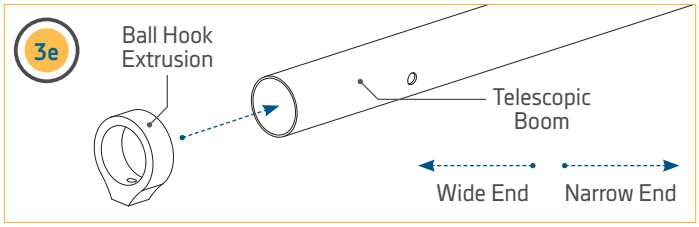

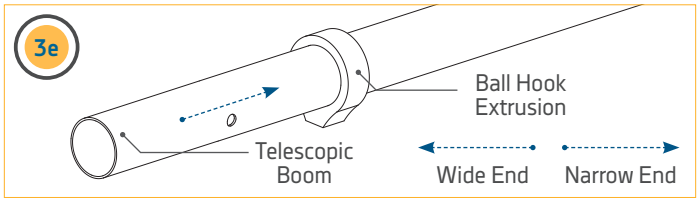

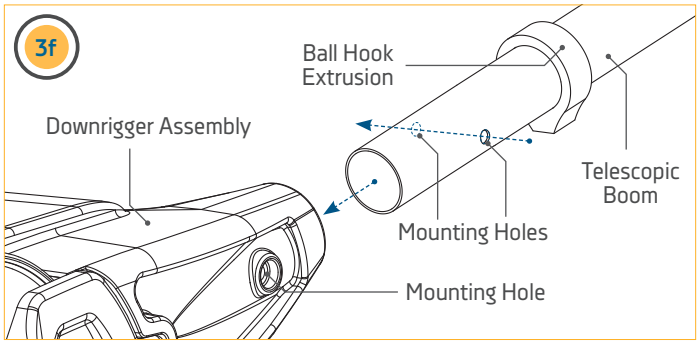

4

Item(s) needed:

#6 x 1

g. The Boom Assembly will be held in place with a Screw and Hex Nut. On the back side of the Downrigger Assembly, on the Motor Side, is a keyed impression for the Nylock Nut. Take the Nylock Nut (Item #6) and press it into the Motor Side of the downrigger, opposite of the Spool Side. The Nylock Nut should be pressed in with the Curved Edge of the Nylock Nut facing outward.

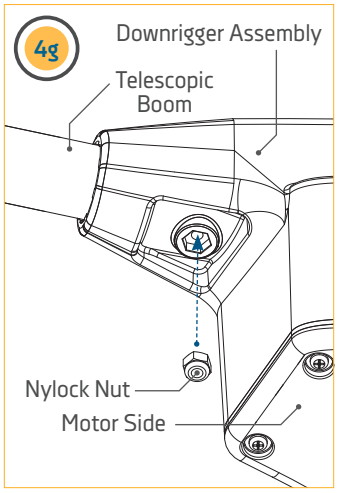

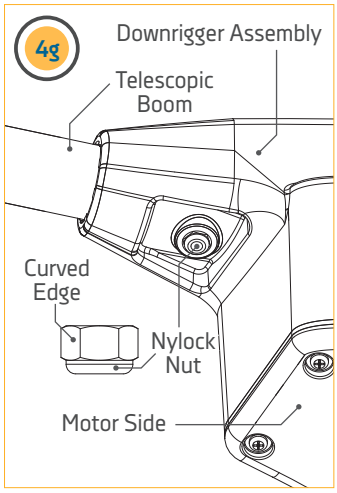

© 2021 | Johnson Outdoors Marine Electronics, Inc. | cannondownriggers.com

5

Item(s) needed:


#16 x 1

h. The 1/4-20 X 2" Phillips Pan Head Screw (Item #16) will be used to secure the Telescopic Boom to the Downrigger Assembly. The Phillips Pan Head Screw will pass from the spool side of the downrigger to the opposite side of the Downrigger Assembly and through the Boom Assembly. On the Motor Side of the Downrigger Assembly the Phillips Pan Head Screw will be secured into the Hex Nut installed above. Tighten the Phillips Pan Head Screw with a Phillips screwdriver until the end of the bolt is flush with the top of the Nylock Nut on the reverse side of the downrigger.

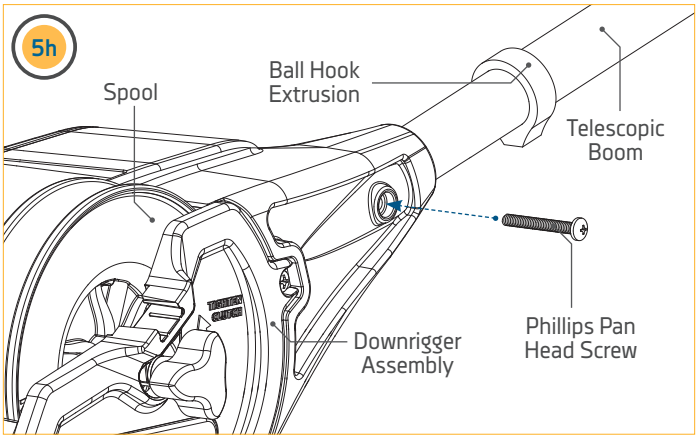

6

i. With the Telescopic Boom secured to the Downrigger Assembly, slide the Ball Hook Extrusion down on the boom until it is seated against the Downrigger Assembly. Rotate the Ball Hook Extrusion so that the Screw Hole is facing downward.

j. Attach the Ball Hook Assembly into the Ball Hook Extrusion and hand tighten it until the Ball Hook Assembly has tightly secured the Ball Hook Extrusion in place on the Telescopic Boom. Turn the Ball Hook until the hook is in the desired orientation, turning clockwise.

NOTICE: Do not over-tighten the Ball Hook Assembly or denting of the Telescopic Boom is possible.

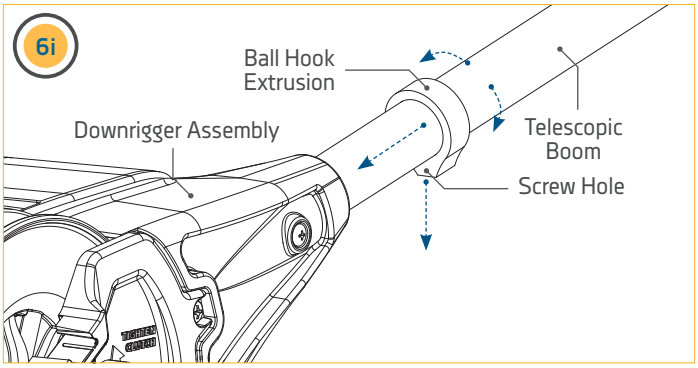

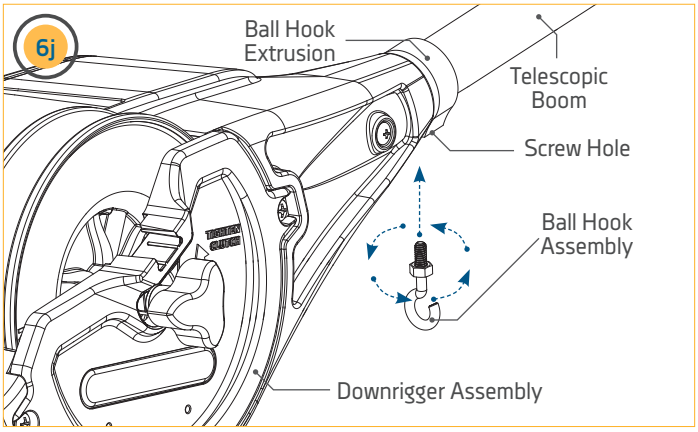

INSTALLING THE SWIVEL HEAD/BOOM END

7

k. Secure the orientation of the Ball Hook by turning the Hex Nut on the Ball Hook Assembly until it is seated tightly against the Ball Hook Extrusion with a 7/16" wrench. Hand tighten until secure.

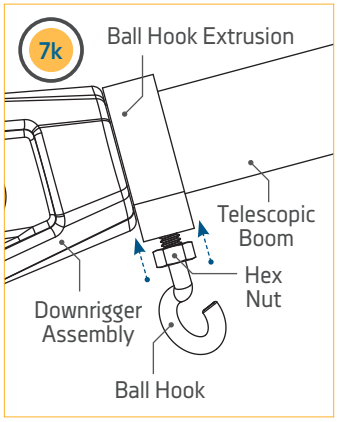

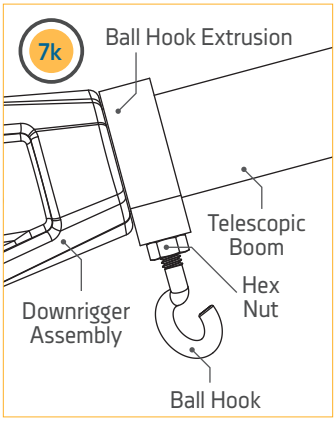

INSTALLING THE SWIVEL HEAD/BOOM END

1

Item(s) needed:

#28 x 1

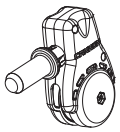

#K x 1

a. Next install the Boom End (Assembly #K) on the end of the Telescopic Boom. Take the Boom End and find the mounting hole along the shaft. The mounting hole in the Shaft of the Boom End should be aligned with the mounting hole in the Center Tube at the narrow end of the Telescopic Boom.

b. Once aligned, take the #8-18 X 5/8" Screw (Item #28) and insert it into the end of the Boom Assembly. Secure the screw with a Phillips Head screwdriver by turning clockwise.

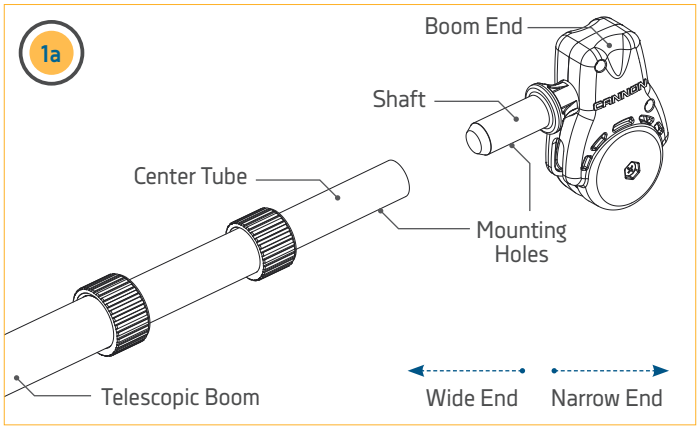

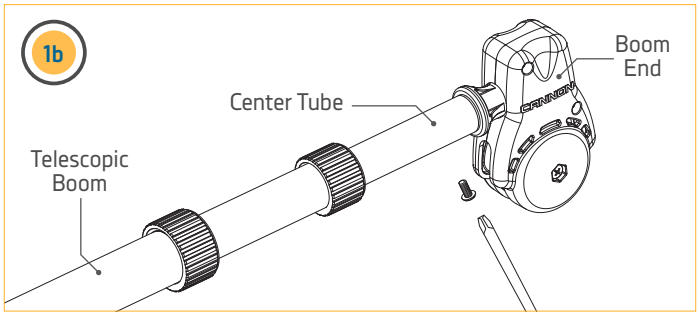

© 2021 | Johnson Outdoors Marine Electronics, Inc. | cannondownriggers.com

TERMINATING THE DOWNRIGGER LINE

With the body of the Cannon downrigger installed, the Line on the Spool can be terminated. The downrigger comes standard with stainless steel Line held in place on the Spool with a Rubber Band. During the termination, it is very important to keep tension on the Line to keep it wound tightly around the Spool. To keep tension on the Spool, the Clutch Knob is first installed and then the Line is routed and terminated. Check to determine that the Clutch Knob was installed by referring to the "Installing the Clutch Knob" section of these instructions. If installed, complete the terminating procedure by following these steps:

To watch a video of Terminating the Cannon Downrigger, follow the link on-line at https://www.youtube.com/watch?v=sQKp73j3aaw

NOTICE: It may be necessary to have a second person help with terminating the Line.

1

a. Locate the Rubber Band on the Line. The Rubber Band is securing both the end of the Line tight and holding the Line around the Spool. Keep the Rubber Band secured to the end of the Line, but loosen it from the Spool so that tension can be kept on the Line end by pulling on the Rubber Band. Once it is loose from the Spool, keep tension on the end of the Line by holding the Rubber Band tight.

b. The Line is wound around the Spool in a counterclockwise direction. Work with the end of the Line the Rubber Band is attached to, so that the end of the Line comes out of the downrigger on the bottom side of the Spool below the Telescopic Boom.

NOTICE: While terminating the Line, it is very important to keep tension on the Line to keep it wound tightly around the Spool.

c. Pull the Line tight by keeping it secure with the Rubber Band. Slide it through the Ball Hook Assembly.

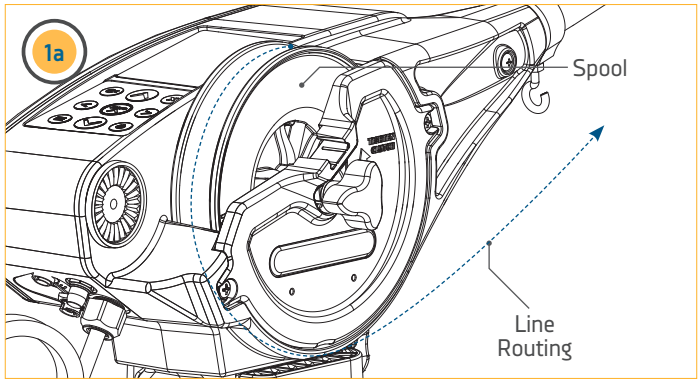

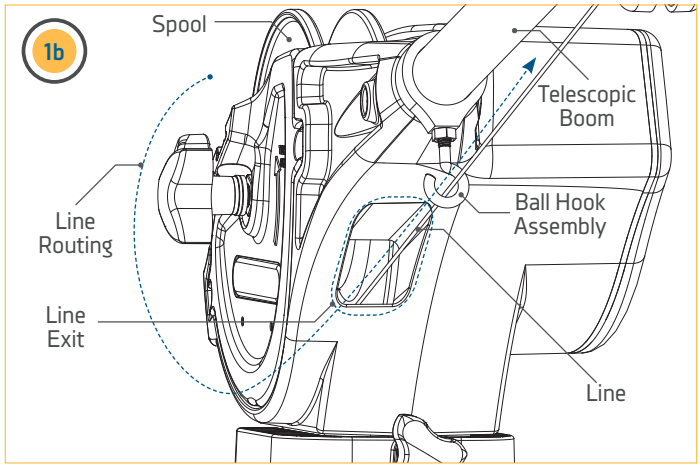

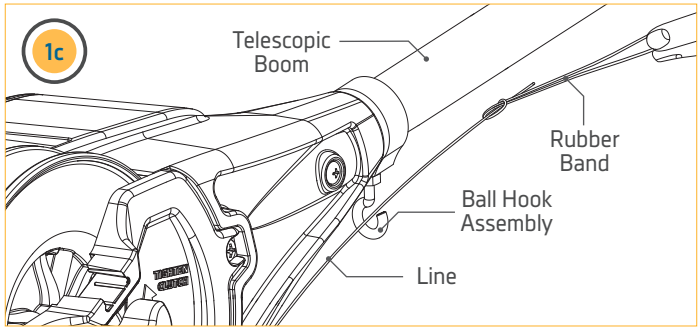

TERMINATING THE DOWNRIGGER LINE

2

d. The Clutch Knob holds tension on the Spool. Loosen the Clutch Knob on the side of the downrigger by turning it clockwise while keeping tension on the Line. Pull the Line so that there is enough slack to feed the Line through the Pulley.

e. Feed the Line through the Pulley on the Boom End so that it exits the Pulley on the far end of the Pulley away from the base of the downrigger. Once it passes through the Pulley, pull approximately 2 feet of Line through the Pulley.

f. Re-tighten the Clutch Knob by turning it counterclockwise and keep tension on the Line.

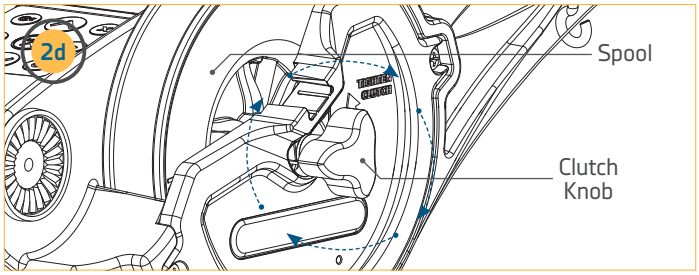

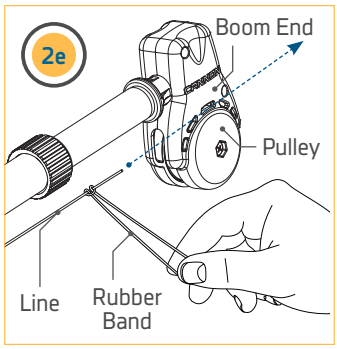

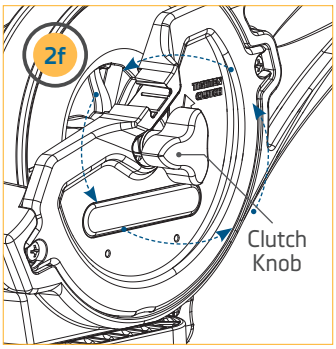

3

Item(s) needed:

#30 X 1

g. Have a second person hold the Line just past the downrigger Boom End to keep tension on the Line. Remove the Rubber Band from the end of the Line.

h. Take a wire cutter and remove any worn or kinked Line.

NOTICE: When routing Line through the Terminator, use only straight Line. Worn or kinked Line can be stressed and may break prematurely when retrieving trolling weights.

i. Take the Cushion Sleeve Terminator (Item #30) and feed the Line so that the narrower end of the sleeve is threaded first. Thread about a foot of Line through the Cushion Sleeve Terminator.

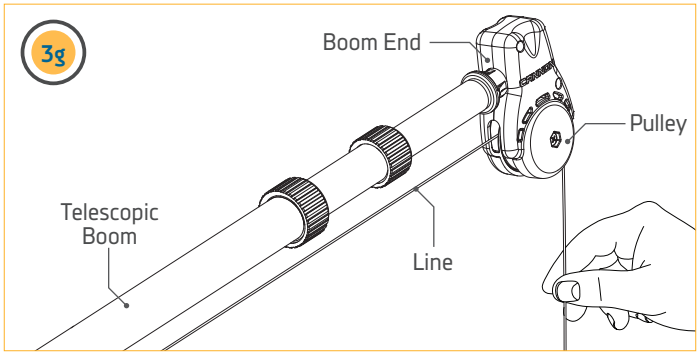

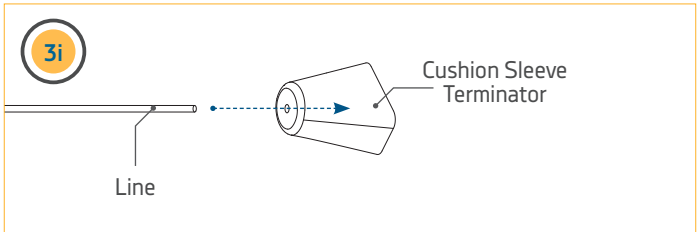

© 2021 | Johnson Outdoors Marine Electronics, Inc. | cannondownriggers.com

4

Item(s) needed:

 #32 X 1  #36 X 1

j. Take the Snap Swivel (Item #36) and attach it to the hook at the bottom of the Cannon Terminator (Item #32). The Snap Swivel can be attached by inserting the end with the smaller metal loop onto the open end of the Bottom Hook on the Terminator. It may be helpful to use a pliers to link the pieces together.

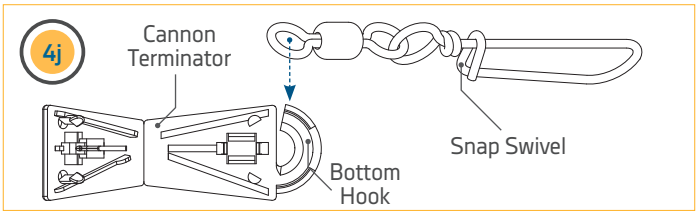

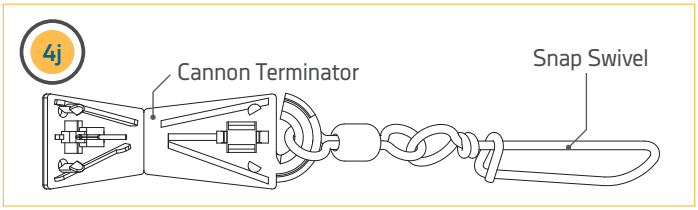

5

k. With the Snap Swivel attached to the Cannon Terminator, identify the front and back of the Terminator. Also look at the holes along the Top Fold and Bottom Hook of the Terminator. There are three holes along the Bottom Hook of the Terminator, one on each side of the hook and one in the middle. There are also 3 holes along the Top Fold all in close proximity to each other. The Line from the downrigger will be routed through the holes to terminate it.

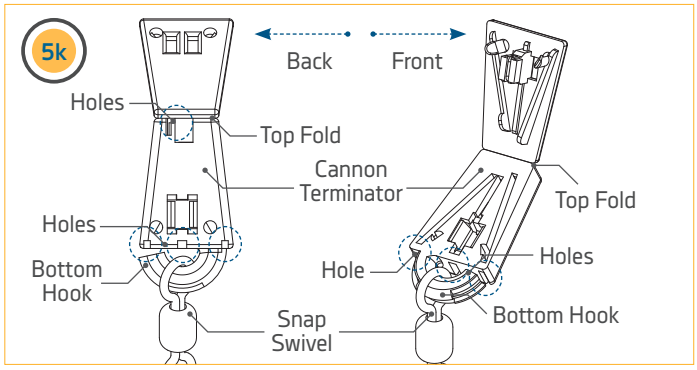

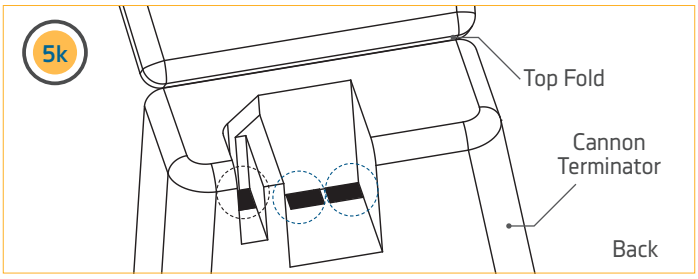

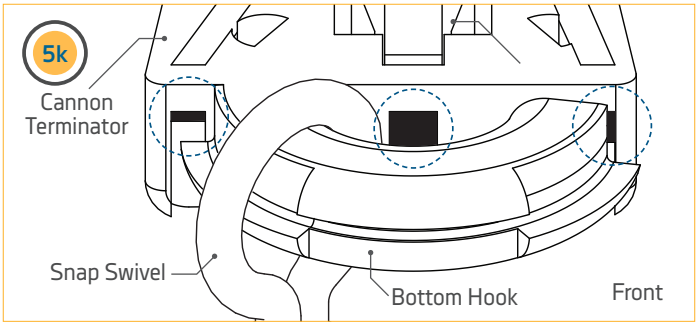

© 2021 | Johnson Outdoors Marine Electronics, Inc. | cannondownriggers.com

TERMINATING THE DOWNRIGGER LINE

6

l. Turn the Terminator so that back side is facing toward you. The opening to the Bottom Hook should be on the left. With the Terminator in this orientation, place the freshly trimmed Line into the hole furthest to the right along the top hole so that the Line passes from the back of the Terminator through the hole to the front of the Terminator.

m. When the Cannon Terminator is turned over facing forward, the Line should follow the Track along the left side of the Terminator to the Bottom Hook. The Line should then be pulled to exit out the bottom along the closed side of the Bottom Hook. Pull about 6 inches of Line from the bottom of the Terminator.

n. With the Line exiting the bottom of the Terminator, slide the Line along the Bottom Hook so that is passes through the loop of the Snap Swivel linked on the Bottom Hook.

o. With the Line through the loop on the Snap Swivel, pass it along the Bottom Hook of the Terminator and insert it into the hole in the space at the far end of the Terminator where the Bottom Hook is detached from its base. Pull about 6 inches of the Line through the hole.

NOTICE: When routing the Line through the Terminator, there may be areas where there is slack in the Line. While routing the Line, it is okay for slack to be present. At the end of the termination process, the slack will be pulled tight. Be sure that the slack in the Line does not get kinked, to keep the Line easy to feed through the Terminator.

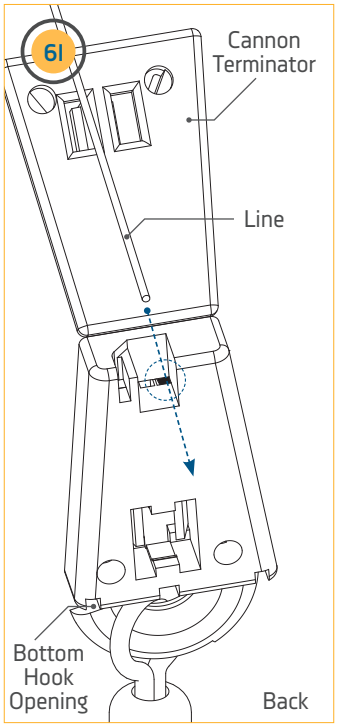

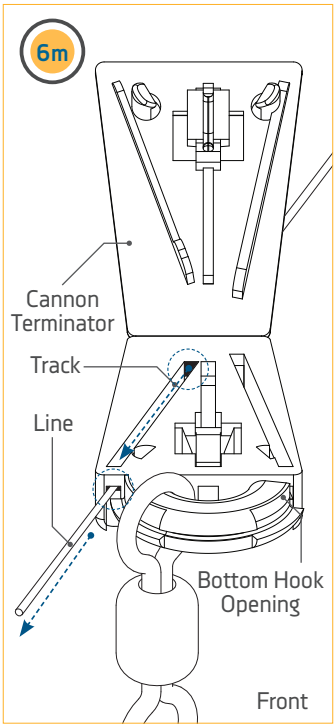

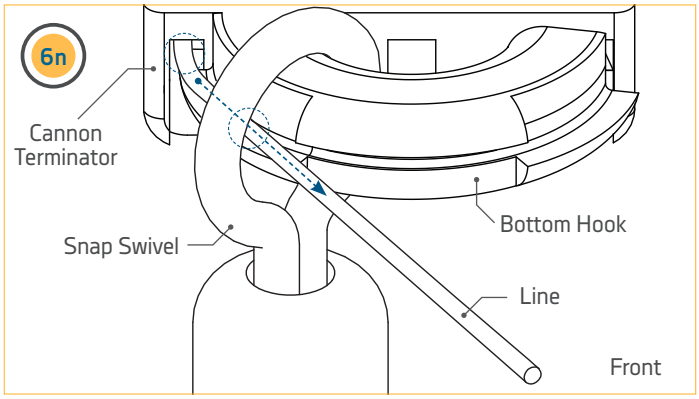

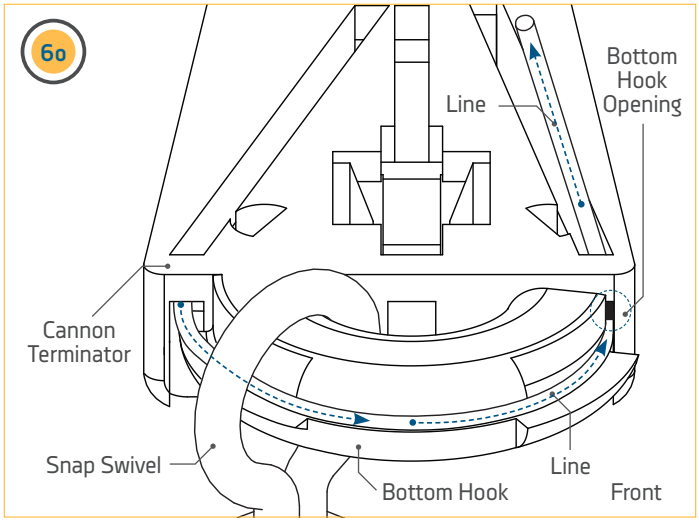

© 2021 | Johnson Outdoors Marine Electronics, Inc. | cannondownriggers.com

7

p. With the front of the Cannon Terminator still facing toward you, take the Line and place it along the track along the right side of the Terminator and insert it so that it exits the hole at the far end of the track. The Line will exit the hole towards the back side of the Terminator.

q. Turn the Terminator over so the back side is facing toward you. Pull about 6 inches of slack through the Terminator.

r. Take the end of the Line and put it through the hole on the back of the Terminator right next to the hole that the Line was just fed out of. The hole is in the middle of the Terminator and is directly between the hole that the Line just exited and the very first hole that the Line was fed through on the Terminator.

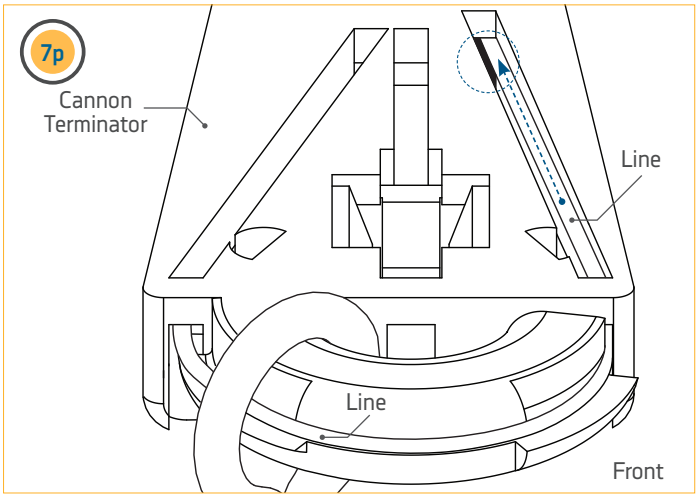

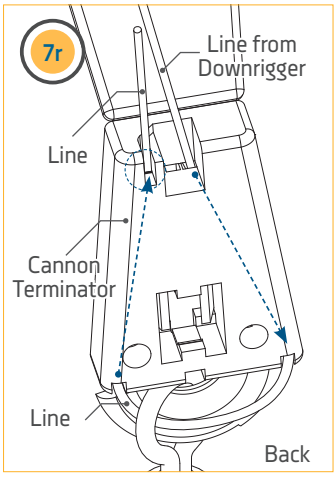

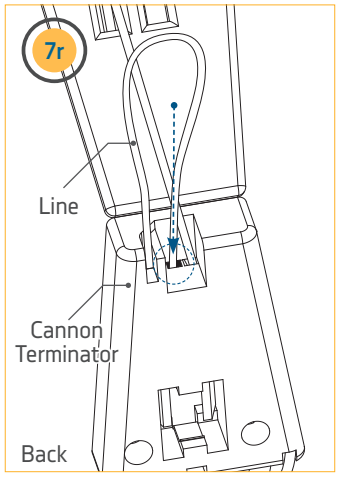

8

s. Turn the Terminator over so that the front of it is facing towards you. The end of the Line that was just inserted into the back of the Terminator should run along the track in the middle of the Terminator. Feed the Line all the way along this Track so that it exits the hole in the middle of the Terminator along the middle of the Bottom Hook at the end of the Track. The Line should stick out about 1/8 inch from the Terminator along the Bottom Hook.

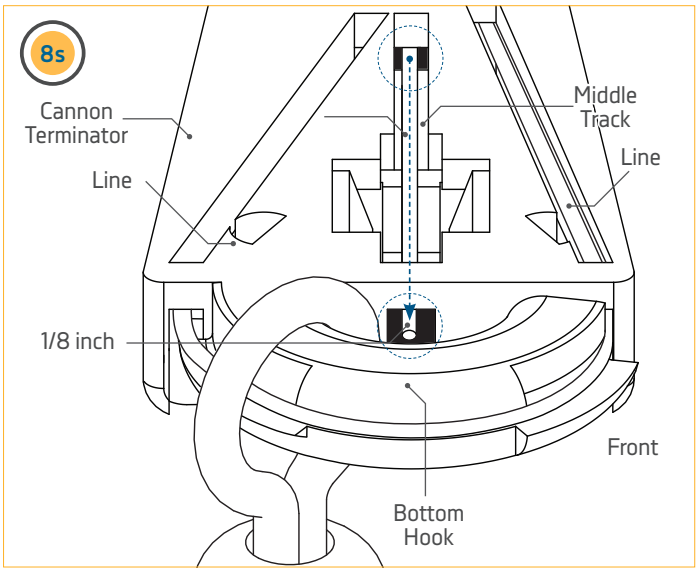

© 2021 | Johnson Outdoors Marine Electronics, Inc. | cannondownriggers.com

TERMINATING THE DOWNRIGGER LINE

9

t. With the End of the Line sticking out the final hole by the Bottom Hook, hold the Terminator and squeeze the Line in the middle track to hold it in place. While keeping the end of the Line in place, pull the Line wound through the Terminator in the opposite direction, so that the slack is pulled tight. Use a pliers if necessary to get the Line tight.

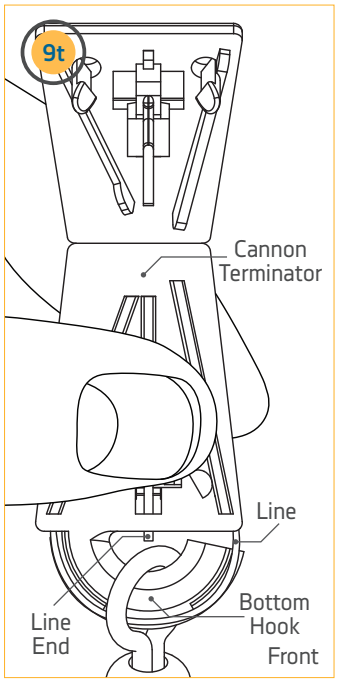

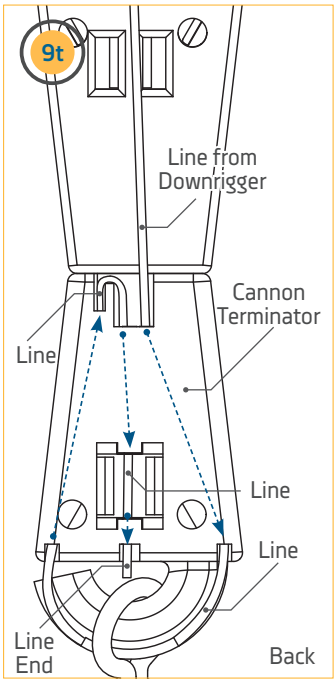

10

u. With the Line tight, close the Cover of the Terminator so that the Clip in the middle of the top cover captures the Line. Use a Pliers to close the Terminator if necessary. With the Terminator closed, Slide the Cushion Sleeve Terminator securely over the Terminator until it is seated against it. Once fully seated, the downrigger is successfully terminated. A Cannon Weight can then be attached directly to the Snap Swivel.

⚠ CAUTION

Do not overload the downrigger. It is designed to retrieve a maximum of 20 lb. weights only.

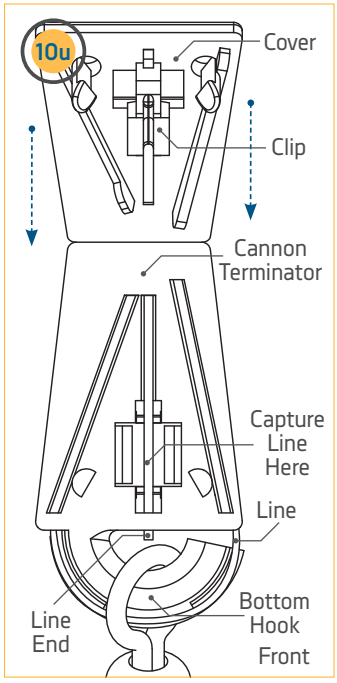

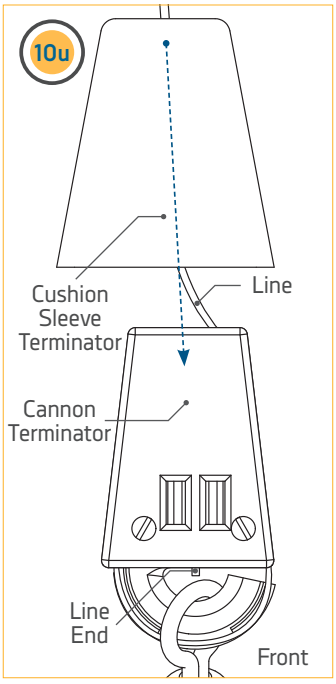

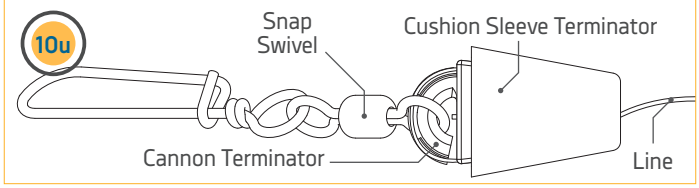

© 2021 | Johnson Outdoors Marine Electronics, Inc. | cannondownriggers.com

INSTALLING THE REAR MOUNT ROD HOLDER

The Cannon Optimum downrigger comes with two Rear Mount Rod Holders, while the Cannon Optimum TS comes with one. The Rod Holder(s) incorporate a two-piece locking tooth design. This allows independent adjustment of the Rod Holder along two axes, which can be easily adjusted every 15° of rotation. The symmetrical design will allow mounting of the Rod Holder on either side of the downrigger or two Rod Holders at the same time. The spring along the shaft of the Soft Grip Knob allows the knob to be loosened and the Rod Holder to be indexed without fully disassembling it. To install, follow the steps below.

NOTICE: The Rod Holder assembly is not covered under warranty when used with tackle above 30 lbs. Equipment placed in the Rod Holders and the loss thereof is the responsibility of the user and is in no way warranted by Johnson Outdoors, Inc. Mounting must be in accordance with the instructions to comply with the product warranty.

⚠ CAUTION

The Rod Holder is intended for use of up to 30lb test line only and is not recommended for use with any tackle IGFA (International Game Fish Association) rated higher than 30lb. A safety strap (not included) is recommended for all applications.

1

Item(s) needed:

 #20 X 1 or 2

 #22 x 1 or 2

 #26 x 1 or 2

a. Depending on the Downrigger, it will come with either one or two Rod Holders. To secure the Rod Holder(s) on the Downrigger Assembly, take one or two Soft Grip Knobs (Item #20) and one or two Spring Releases (Item #22). Place one spring on the end of each Soft Grip Knob.

b. If the downrigger came with one Rod Holder, determine which side of the downrigger to install the Rod Holder on based on how your downrigger is mounted and how it will be used. Once the location of the Rod Holder is determined, take the Dual Axis Rod Holder Arm (Item #26) and turn it so that the short end of the elbow will be placed against the Downrigger Assembly. The face of the Dual Axis Rod Holder Arm that is installed on the downrigger contains keyed teeth which are matched on the Dual Axis Rod Holder Arm. These keyed teeth will help to hold the position of the knob and help to hold it in place when the position of the holder is changed during use. Secure the Dual Axis Rod Holder Arm with the Soft Grip Knob.

NOTICE: The Tournament Series Optimum downrigger comes with one Rod Holder, the standard Optimum downrigger comes with two Rod Holders.

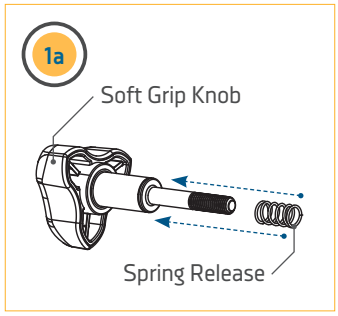

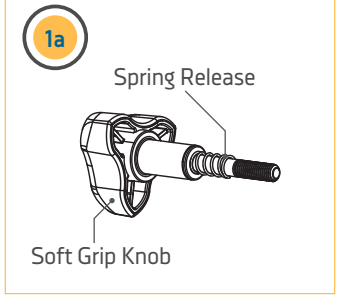

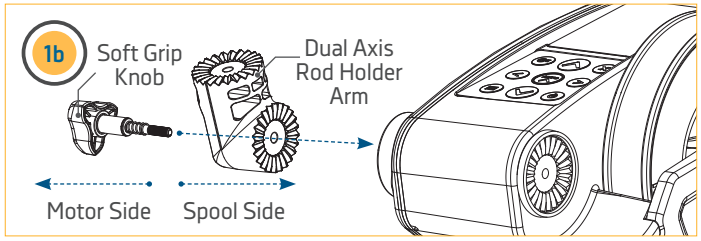

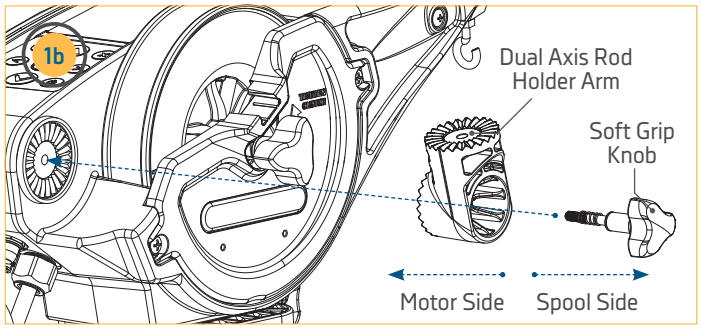

INSTALLING THE REAR MOUNT ROD HOLDER

2

Item(s) needed:

 #20 X 1 or 2

 #22 x 1 or 2

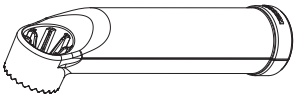 #34 X 1

c. A Soft Grip Knob will be used to secure the Dual Axis Rod Holder Tube to the Arm just installed. Take one or two Soft Grip Knobs (Item #20) and one or two Spring Releases (Item #22). Place one spring on the end of each Soft Grip Knob.

d. Take the Dual Axis Rod Holder Tube (Item #24) and turn it so that the short end of the piece will be placed against the Dual Axis Rod Holder Arm. The face of the Dual Axis Rod Holder Arm that contains keyed teeth which are matched on the Dual Axis Rod Holder Tube. These keyed teeth will help to hold the position of the knob and help to hold it in place when the position of the holder is changed during use. Secure the Dual Axis Rod Holder Tube with the Soft Grip Knob.

e. To adjust the direction of the Dual Axis Rod Holder Arm or tube, loosen the Soft Grip Knob and rotate in the desired direction. Then re-tighten the Soft Grip Knob to secure in place.

NOTICE: The Soft Grip Knobs and Spring Releases will be inside the Dual Axis Rod Holder Tube.

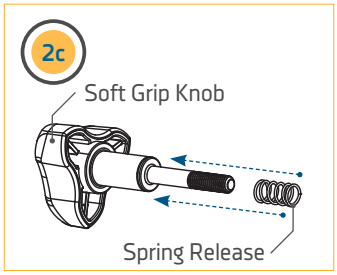

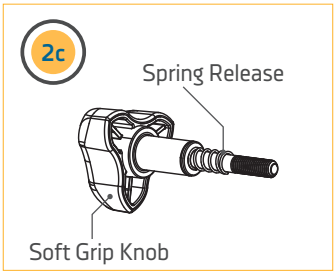

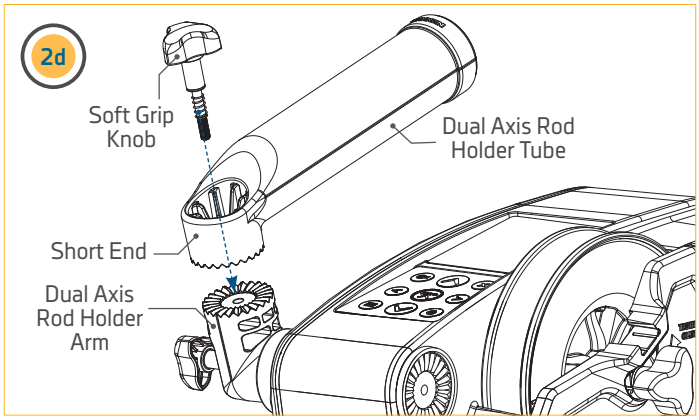

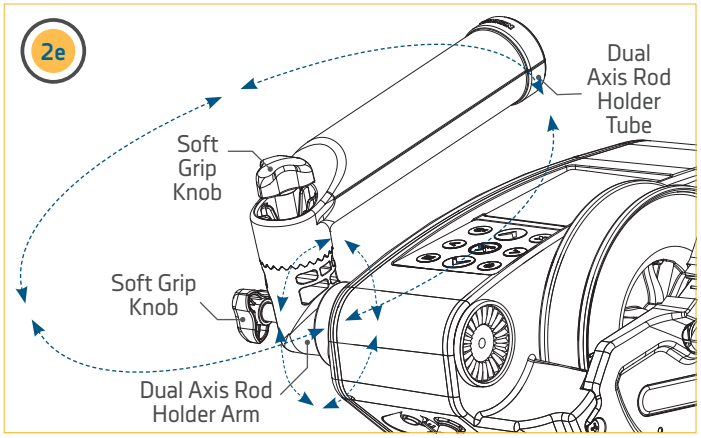

© 2021 | Johnson Outdoors Marine Electronics, Inc. | cannondownriggers.com

BATTERY & WIRING INSTALLATION

RIGGING & INSTALLATION GUIDELINES

For safety and compliance reasons, we recommend that you follow American Boat and Yacht Council (ABYC) standards when rigging your boat. Altering boat wiring should be completed by a qualified marine technician. The following specifications are for general guidelines only:

⚠ CAUTION

These guidelines apply to general rigging to support your Cannon product. Powering multiple downriggers or additional electrical devices from the same power circuit may impact the recommended conductor gauge and circuit breaker size. If you are using wire longer than that provided with your unit, follow the conductor gauge and circuit breaker sizing table below. If your wire extension length is more than 30 feet, we recommend that you contact a qualified marine technician.

⚠ CAUTION

Please read the following information before connecting your downrigger to a battery in order to avoid damaging your product and/or voiding your warranty.

CONDUCTOR GAUGE AND CIRCUIT BREAKER SIZING TABLE

This conductor and circuit breaker sizing table is only valid for the following assumptions:

1. No more than 2 conductors are bundled together inside of a sheath or conduit outside of engine spaces.
2. Each conductor has 105° C temp rated insulation.
3. No more than 5% voltage drop allowed at full motor power based on published product power requirements.

Fuse/Breaker Specifications	Wire Specifications		
30 Amp, 32 Volt, Waterproof, Fast Blow	10 Gauge	8 Gauge	6 Gauge
	0-10 feet	11-15 feet	16-20 feet
	0-3 meters	3-4.5 meters	4.5-6 meters

⚠ CAUTION

An over-current protection device (circuit breaker or fuse) must be used. Coast Guard requirements dictate that each ungrounded current-carrying conductor must be protected by a manually reset, trip-free circuit breaker or fuse. The type (voltage and current rating) of the fuse or circuit breaker must be sized accordingly to the Cannon downrigger used.

Reference - United States Code of Federal Regulations: 33 CFR 183: Boats and Associated Equipment ABYC E-11: AC and DC Electrical Systems on Boats

RECOMMENDATIONS FOR MAINTAINING BOAT'S ELECTRICAL CONDITION

Whenever a boat is in water, various submerged parts interact to create weak electrical currents. These weak electrical currents should be controlled to extend the life of the boat's metal parts and ensure a good fish catching environment. In order for the Positive Ion Control and Short Stop (PIC) on your downrigger to work correctly, it is important to make sure your boat is properly set up before installing your downrigger. For full details on how the Positive Ion Control system works, see the "Positive Ion Control" section of the Owner's Manual.

NOTICE: To ensure proper operation of your downrigger, ground the downrigger battery to your boat's electrical system's ground. Always check to see if your boat is properly grounded first. Malfunctions with the Positive Ion Control, communication between units, or loss of operation result from faulty grounding.

- If the zinc sacrificial anodes on your boat and on the outboard/outdrive are more than half dissolved, it is recommended that they be replaced. Clean anodes on a regular basis with a non-corrosive brush.
- Any coating of slime or growth on the boat should be cleaned off.
- All metal parts including the hull (if metal) should be interconnected by a grounding wire. This includes motor shafts, outdrives, and through hull fittings. This will ensure that the boat is properly grounded to the water and allow Positive Ion Control and Short Stop to work correctly.
- The line on your downrigger should be replaced every 2 years. Etching of the line can weaken it physically and electrically.
- The use of Cannon coated weights and the snap assembly with the insulator will help insulate the weight from the positively charged line.

ELECTRICAL SPECIFICATIONS & WIRING INSTRUCTIONS

The downrigger is rated at 30 amps (full load), 12 volts DC and is protected by a 25 amp manual reset circuit breaker (located under motor housing). Be sure to measure the battery voltage of your boat.

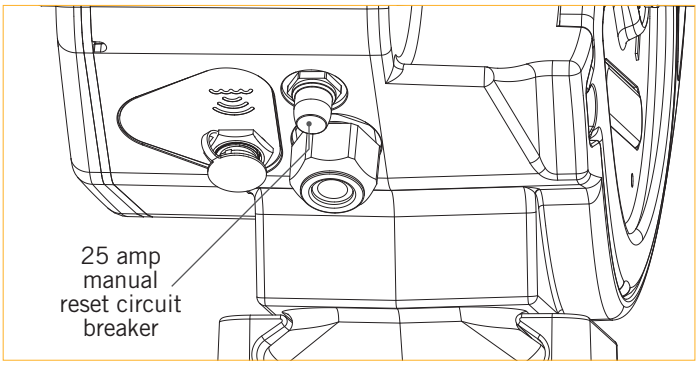

⚠ WARNING

Do not run this downrigger on a 24 volt or higher battery system. This will damage the unit and void your warranty. Only connect your downrigger to a 12 volt battery system.

⚠ WARNING

It is strongly recommended to power your downrigger with a battery capable of providing high currents for an extended period of time. Only run a downrigger from a Starter battery if it is recharged by an alternator while the downrigger is running.

⚠ WARNING

Never connect the (+) and the (–) terminals of the same battery together. Take care that no metal object can fall onto the battery and short the terminals. This would immediately lead to a short and extreme fire danger.

© 2021 | Johnson Outdoors Marine Electronics, Inc. | cannondownriggers.com

CONNECTING TO THE BATTERY

It is strongly recommended that a fuse or manual reset circuit breaker be installed within 7 inches from the battery on the positive lead of the power cable. In addition, you may also connect the downrigger to a battery selector switch. It is strongly recommended to power your downrigger with a Deep-Cycle marine battery. Only run a downrigger from a Starter battery if it is recharged by an alternator while the downrigger is running.

1. Make sure that the downrigger is powered "off" or the Quick Connect Plug on the downrigger Power Cable is disconnected.
2. Connect positive (+) red lead to positive (+) battery terminal.
3. Connect negative (–) black lead to negative (–) battery terminal.
4. Reconnect the Quick Connect Plug when ready to use the downrigger.

NOTICE: Control degradation of the power cables and limit corrosion by using anti-oxidant gel on all connections. Do not use wing nuts.

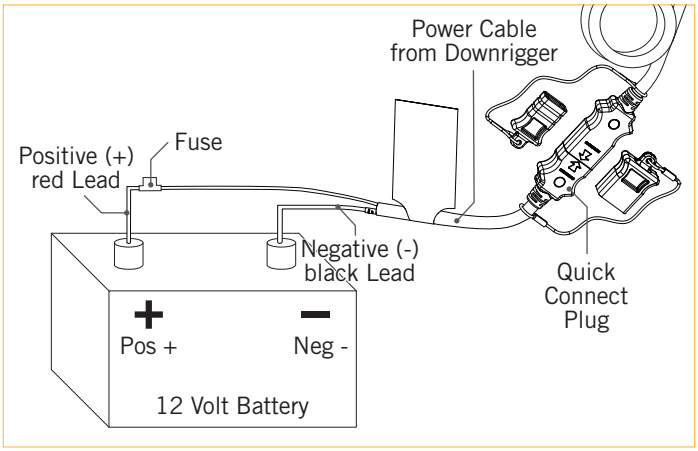

⚠ CAUTION

Refer to “Conductor Gauge and Circuit Breaker Sizing Table” in the previous section to find the appropriate circuit breaker or fuse for your downrigger.

⚠ WARNING

For safety reasons, disconnect the downrigger from the battery when the downrigger is not in use or while the battery/batteries are being charged. If installing a leadwire plug, observe proper polarity and follow instructions in your boat owner’s manual. Keep leadwire connections tight and solid to battery terminals. Locate battery in a ventilated compartment.

POWERING MULTIPLE DOWNRIGGERS

When operating multiple downriggers, run a maximum of 2 downriggers per dedicated 12 volt battery. Follow the instructions from the "Connecting to the Battery" section of these Installation Instructions. Repeat the directions for each downrigger.

NOTICE: Use the Quick Connect Plug to remove power from the downrigger without touching the battery.

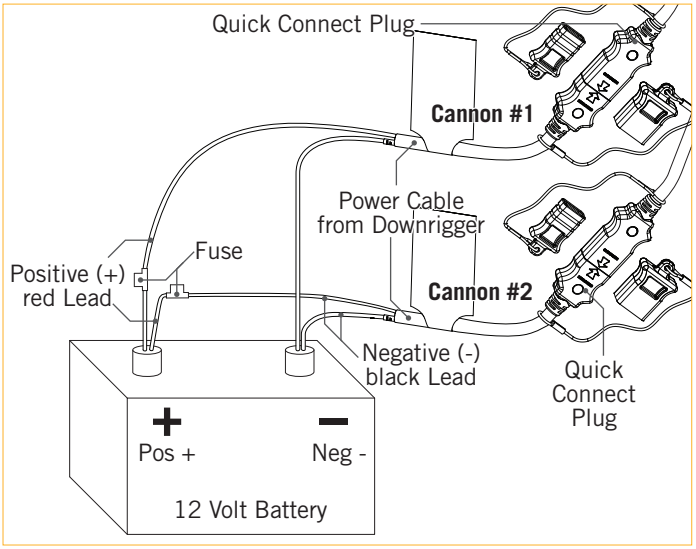

© 2021 | Johnson Outdoors Marine Electronics, Inc. | cannondownriggers.com

ADDITIONAL CONSIDERATIONS

ADDITIONAL ACCESSORIES CONNECTED TO DOWNRIGGER BATTERIES

Significant damage to your Cannon downrigger, your boat electronics, and your boat can occur if incorrect connections are made between your downrigger batteries and other battery systems. It is recommended to use an exclusive battery system for your downrigger. Where possible, accessories should be connected to a separate battery system. Radios and sonar units should not be connected to any downrigger battery systems as interference from the downrigger is unavoidable. If connecting any additional accessories to any downrigger battery system, or making connections between the downrigger batteries and other battery systems on the boat, be sure to carefully observe the information below.

The negative (-) connection of an accessory device must be connected to the negative terminal of the same battery that the downrigger negative lead connects to. Connecting to any other downrigger battery will input positive voltage into the "ground" of that accessory, which can cause excess corrosion. Any damage caused by incorrect connections between battery systems will not be covered under warranty.

AUTOMATIC JUMP START SYSTEMS AND SELECTOR SWITCHES

Automatic jump start systems and selector switches tie the negatives of the connected batteries together. Please see a qualified marine technician if installing your Cannon downrigger with one of these systems or a selector switch.

SELECTING THE CORRECT BATTERIES

The downrigger will operate with any lead acid deep cycle marine or Lithium 12 volt battery/batteries. For best results, use a deep cycle marine battery. Maintain battery at full charge. Proper care will ensure having battery power when you need it, and will significantly improve the battery life. Failure to recharge lead-acid batteries (within 12-24 hours) is the leading cause of premature battery failure. Use a multi-stage charger to avoid overcharging. We offer a wide selection of chargers to fit your charging needs. If you are using a crank battery to start a gasoline outboard, we recommend that you use a separate deep cycle marine battery/batteries for your Cannon downrigger.

© 2021 | Johnson Outdoors Marine Electronics, Inc. | cannondownriggers.com

WIRING DIAGRAM

OPTIMUM & OPTIMUM TS

The following Wiring Diagram applies to all Optimum and Optimum TS models.

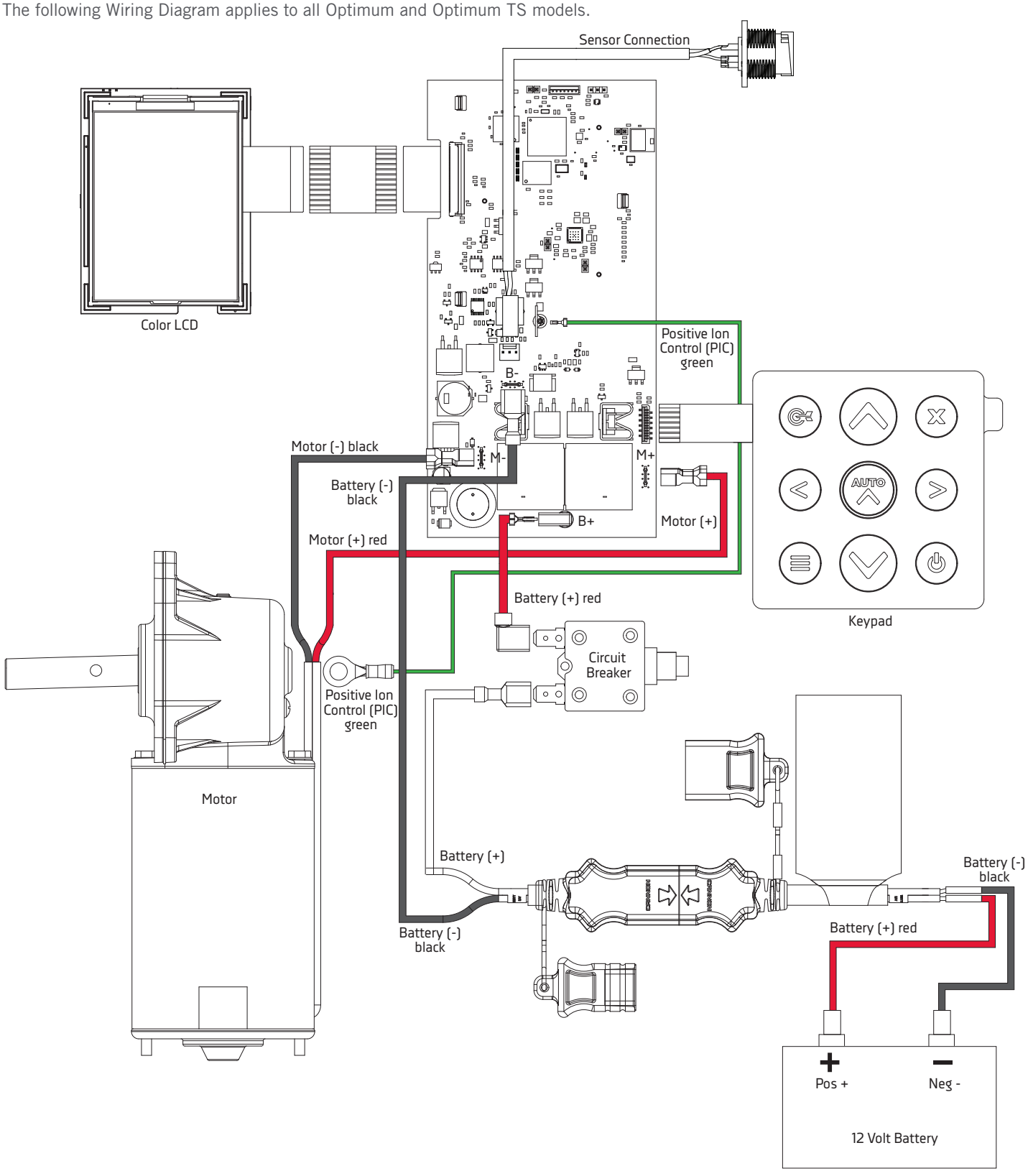

SETUP GUIDE

SETTING UP THE OPTIMUM™

When powering the downrigger "on" for the first time, the Color LCD will bring up a Setup Guide. In order to follow through the Setup Guide, first become familiar with the downrigger keypad. When comfortable with the keypad, follow through the Setup Guide to customize downrigger settings before beginning to use the downrigger for fishing. The Setup Guide will also appear the first time that the downrigger is powered "on" after the defaults have been restored.

DOWNRIGGER KEYPAD

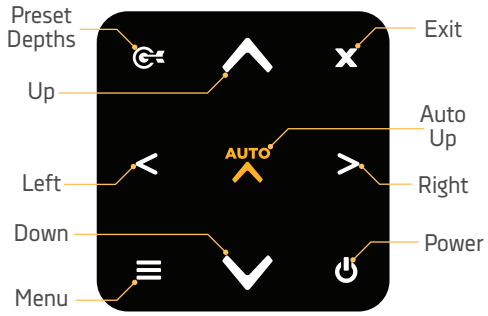

POWER - When the downrigger is "off", press to turn the downrigger "on". When the downrigger is "on", a quick press will open the Power Menu or pressing and holding for 3 seconds will power the downrigger "off".

UP - When all menus are closed, press to control the Spool to bring the weight up and the line in. The weight will continue to come up until the button is released or the line counter reaches "0". If the downrigger is currently moving the line when pressed, it will cancel the action. When any menu is open, pressing it will cycle up through the menu options. If the menu reaches the top of the list it will move to the bottom and continue to move up the options.

AUTO UP - Single press to automatically bring the weight up and the line in at speed 5. The weight will continue to come up until the line counter reaches 0 or Short Stop is engaged even when the button in released. Single press and hold to bring the weight up for all downriggers in the Network. Use the Right > button to confirm the Auto Up All selection. The weights for all downriggers will continue to come up following the same controls for a single downrigger.

DOWN - When all menus are closed, press to control the Spool to send the weight down and the line out. The weight will continue to go down until the button is released or the line is completely let out. If the downrigger is currently moving the line when pressed, it will cancel the action. When any menu is open, pressing will cycle down through the menu options. If the menu reaches the bottom of the list it will move to the top and continue to move down the options.

LEFT - Press to make selections, adjustments to menus or change Views.

RIGHT - Press to make selections, adjustments to menus or change Views. When menu selections are finalized, press to close the menu.

MENU - When the Color LCD has any one of the Views open on the screen, a single press will open the Quick Menu for the View displayed. Double press from any View to open the Settings Menu. If the Settings Menu is open, pressing again will close the menu. If a Quick Menu is open, a single press will open the Settings Menu.

PRESET DEPTHS - Press to open the Preset Depths Menu and to access Last Depth Recall.

EXIT - Press to exit or close menus. Returns Color LCD to the last screen or View.

© 2021 | Johnson Outdoors Marine Electronics, Inc. | cannondownriggers.com

SETUP GUIDE

The Setup Guide is a set of menus that help the user select settings to help with downrigger operation. All of the options in the Setup Guide can be accessed in menus within the downrigger if preferences change after initial setup. The Setup Guide will first bring up a menu that gives the user the option to select Language, Battery Alarm, Temperature, Depth/Distance and Speed. Use the Up button and the Down button to scroll to the options in the list and use the Right button and the Left button to change the setting for each one. Once the options in the first menu are selected, scroll to the Continue option and use the Right button to select it. This brings up a second menu in the Setup Guide. The second menu allows the user to select the amount of Line on Spool, Line Type and Line Weight. The second menu is navigated in the same way as the first. Once happy with the selections, scroll to the Complete Setup option and use the Right button to select it. After the second menu is complete, the downrigger will bring up information on the Cannon Transducer. Read the information on the Color LCD and then use the Right button to Select next. This is followed by a message about the Fish Hawk and Humminbird® fish finder. Read the messages and then use the Right button to select Next. Selecting next on the Humminbird screen completes the Setup Guide.

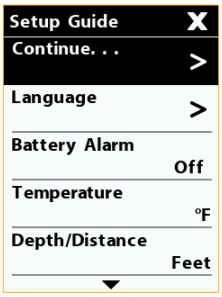







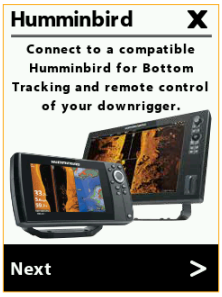

LANGUAGE - Choose between 1 of 22 languages. The default language is English. Use the Right button to confirm the language and make sure that the radio button to the right of the desired language is selected.

BATTERY ALARM - Shows an alarm when the battery drops below a certain voltage. The default is set to "off", but can be adjusted between 9.0V and 13.5V. Use the Right button or the Left button to edit the sliding scale.

TEMPERATURE - Sets the temperature readings to Fahrenheit or Celsius. Use the Right button or the Left button to scroll between the options. The default is set to Fahrenheit.

DEPTH/DISTANCE - Sets the Distance and Depth reading measurements in units of Feet or Meters. Use the Right button or the Left button to scroll between the options. The default is set to Feet.

SPEED - Sets the Speed measurements in units of mph (miles per hour), kph (kilometers per hour), or kts (knots). Use the Right button or the Left button to scroll between the options. The default is set to mph.

LINE ON SPOOL - Program the downrigger with the amount of Line on the Spool. The spool comes installed with 400 feet of stainless steel line. The Line on the Spool is set to the default of 400 feet. The range can be adjusted from 150 feet, (the minimum suggested amount) to 400. The Line on Spool can be adjusted on 50-foot increments on a sliding scale that can be adjusted using the Right button or the Left button.

LINE TYPE - The default Line Type is stainless steel line, but can be set to either Braided, Stainless Steel or Mono. Use the Right button or the Left button to scroll between the options.

LINE WEIGHT - The default Line Weight is 50-150lbs, but can be set to either 50-150lbs, 150-200lbs or 200+lbs. Use the Right button or the Left button to scroll between the options.

DEFAULT SETTINGS

OPTIMUM DEFAULT SETTINGS

Your downrigger was shipped with the following factory default settings.

General Defaults	
Language	English
Battery Alarm	Off
Temperature	°F
Depth/Distance	Feet
Speed	mph
Bluetooth	Nothing Paired/ Master not defined
Backlight	10
Display Mode	Day Mode
PIC Value	0.6V
Up Speed	3
Down Speed	3

Depth Presets	
1	25 feet
2	50 feet
3	75 feet
4	100 feet
5	150 feet

Line Settings	
Line on Spool/Reel	400 ft
Line Type	Stainless Steel
Line Weight	50 – 150 lb

Cycle Mode	
Cycle Depth	Auto
Range	10 feet
Pause Time	5 Seconds
Up Speed	3
Down Speed	3

Bottom Tracking	
Offset Distance	10 feet
Sensitivity	6 feet

Sonar View	
Sensitivity	10
SwitchFire	Clear Mode
Surface Clutter	5
Chart Speed	5
Upper Depth Range	0 ft
Lower Depth Range	Auto
Sonar Color	Pictorial Sample

To restore defaults, double press the Menu button from any downrigger View to open the Settings Menu. Use the Up button and the Down button to find Preferences in the Settings Menu. Use the Right button to select Preferences and open the Preferences Menu. Use the Up button and the Down button to find Restore Defaults in the Preferences Menu. Use the Right button to select Restore Defaults and then use the Right button again to confirm the selection. This restores all default settings on the downrigger. When restoring defaults, the downrigger will cycle power and reboot. The first time that the downrigger is powered back on after the defaults have been restored, the downrigger will bring up the Setup Guide. Read more about the Setup Guide in the Setup Guide section of this document.

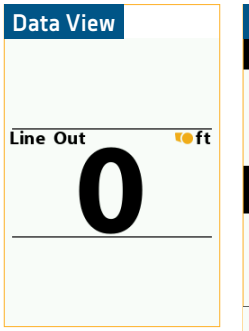

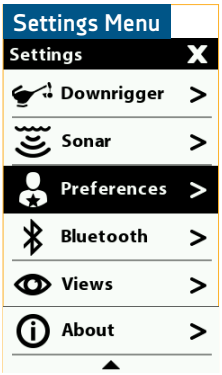

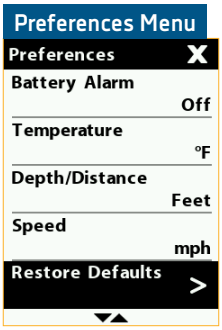

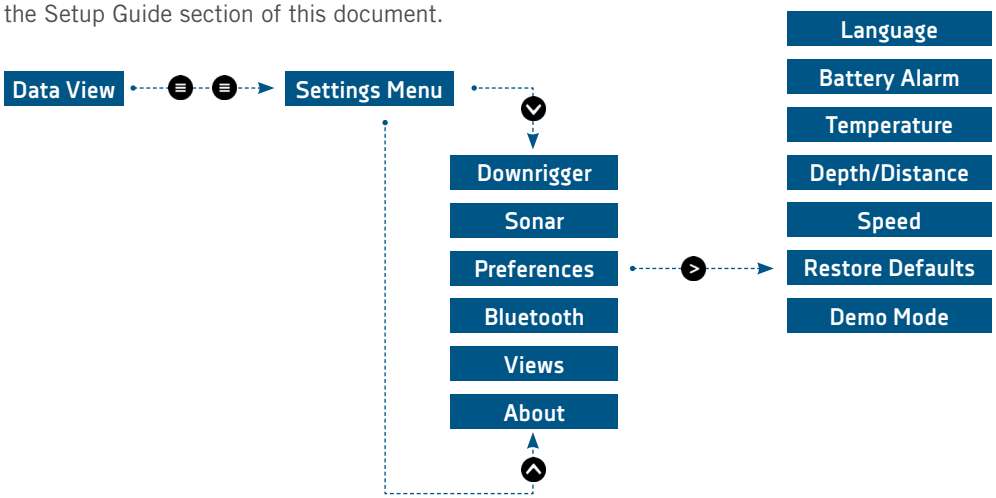

© 2021 | Johnson Outdoors Marine Electronics, Inc. | cannondownriggers.com

CONNECTING THE DOWNRIGGER

NETWORKING THE OPTIMUM

Through the One-Boat Network™, the Cannon Optimum downrigger can be wirelessly networked to give you total control of your downrigger from anywhere on your boat. If you want to put bait on target, you've got to fish smarter. The new Optimum™ downrigger is positively ingenious. This smart, connected system gives you access to critical trolling data and lets you raise, lower and cycle weights using the full-color LCD display, or your mobile device. No matter where you are on the boat, you're in charge. And the fish won't know what hit them.

The network works by designating one Master downrigger that is paired with all additional equipment through a wireless network. This network includes up to 3 additional Optimum downriggers, a mobile device, the Fish Hawk X4D System and a Cannon transducer. Any one of the Optimum downriggers in the network can be designated as the Master downrigger. The Master downrigger is the central communication hub for the network in which all devices are paired to. Complete the "Installing the Optimum" and "Battery & Wiring" sections of these instructions before setting up the Cannon Optimum downrigger wireless network. Carefully read the information below about how the network functions and then continue to the following sections to pair the additional equipment to the network to set it up for proper control.

THE BLUETOOTH OPTIMUM AND OPTIMUM TS NETWORK

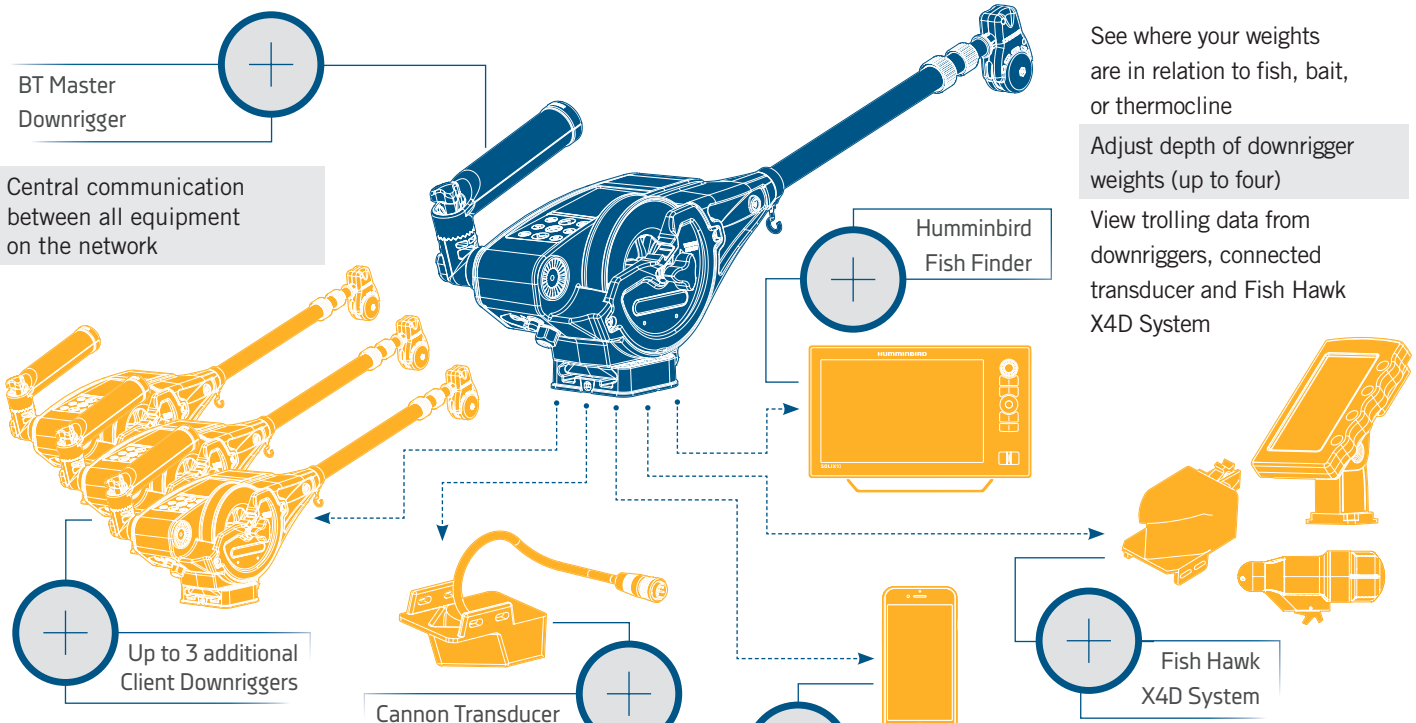

BT Master Downrigger

Central communication between all equipment on the network

Humminbird Fish Finder

See where your weights are in relation to fish, bait, or thermocline

Adjust depth of downrigger weights (up to four)

View trolling data from downriggers, connected transducer and Fish Hawk X4D System

Up to 3 additional Client Downriggers

Allows for additional lines in the water with a central control point

Can all be controlled individually on the connected Mobile Device paired to the Master downrigger

Cannon Transducer

Provides bottom tracking ability to Optimum downriggers

Allows each networked downrigger to track at different depths from the bottom

Provides depth data from surface

2D sonar data (120khz) viewable from the Master downrigger LCD screen with digital depth viewable on all Client downriggers

Mobile Device

Full control of all Downriggers in the network

Access the Cannon app on iOS devices through the Apple App store or Android devices through the Google Play store

Allows for software updates

Displays data from Cannon Transducer and Fish Hawk X4D System

Fish Hawk X4D System

Proven wireless, sonar data transmission

Communicates probe depth, temperature, and speed; along with surface temperature and speed

Water activated, leak-proof probe

Long probe battery life (100+ continuous hours on 4 AA)

Water pressure sensor provides true depth of probe & downrigger weight

CONNECTING THE DOWNRIGGER

THE MASTER DOWNRIGGER

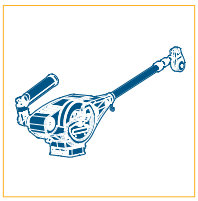

The Master downrigger is the Optimum downrigger on the system that is designated to be the central communication hub for the wireless network. Running multiple lines is easier than ever, because complicated wiring is a thing of the past. You can network up to four Optimum downriggers wirelessly. Any downrigger that is added to the network is paired directly to the Master downrigger. The Cannon transducer is plugged into the Master downrigger. The Master downrigger is also paired with the Mobile Device and the Fish Hawk X4D system. The Master downrigger is used to control the communication between the equipment on the network. For example if the downrigger received a software update from the Cannon app, the Master downrigger will communicate the update to any Client downrigger it is paired with. In networks where only one downrigger exists, it will automatically become the Master downrigger if any of the other equipment is connected or paired to it. There cannot be two Master downriggers in a network.

THE CLIENT DOWNRIGGER(S)

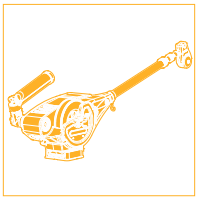

Any downrigger that is paired to the Master downrigger is a Client downrigger. The network can support up to three Client downriggers. The Client downriggers receive information from the Master including software updates from the Cannon app and sonar or probe information from any paired equipment. The network will be interrupted if any additional equipment, besides the Master downrigger are paired to a Client downrigger. Any Client downrigger in the network can be controlled on the Mobile Device paired to the network through the Cannon app.

THE CANNON TRANSDUCER

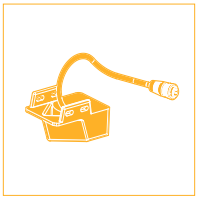

The Cannon Transducer is the only wired piece of equipment in the Network. The Cannon transducer should only be plugged into the Master downrigger. It delivers sonar data that is displayed on the downrigger Color LCD. The Cannon transducer gives downriggers the ability to use the Bottom Tracking feature and contributes valuable trolling information to the Network. Plugging the Cannon Transducer into any downrigger in the network other than the Master downrigger will interrupt the network.

A MOBILE DEVICE

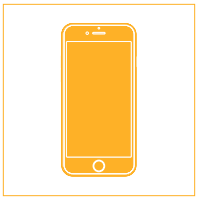

With the Cannon app on your mobile device, you'll have trolling data at your fingertips and total control of your Optimum downriggers from anywhere on your boat. It even keeps your Optimum software up to date. The Cannon app will only work with Bluetooth® enabled Cannon downriggers. Be sure that you download the correct app as other apps will not work with your Cannon Optimum or Optimum TS downrigger. Launching the app when it is not paired with the Cannon will allow you to try it in Demo Mode. The first time the app is launched, you must agree with the disclaimer in order to continue. Become familiar with the app screens in order to understand how to operate your downrigger(s) with the Cannon app. The Mobile Device should be paired with the Master Downrigger.

THE FISH HAWK X4D SYSTEM

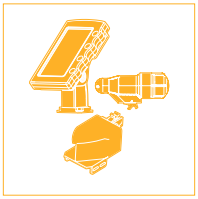

Every Optimum downrigger integrates wirelessly with Fish Hawk X4D System to give you the critical info you need to troll successfully. This system provides the true running depth and speed of your weight, the temperature at the weight, plus surface temperature and speed. Within the wireless Network, the Fish Hawk should only be paired with the Master downrigger.

A HUMMINBIRD FISH FINDER

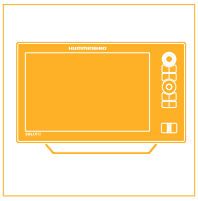

Optimum downriggers wirelessly network together giving you control of all of your downriggers with push of a button. They connect with your Humminbird® fish finder and your mobile device for total control and to display trolling data. When paired with a Humminbird fish finder, the Optimum can use a Humminbird connected transducer as the source for the Bottom Tracking feature. With the One-Boat Network™, your advanced fishing gear does more than work together. It starts talking to each other wirelessly, to help you find, stay on and land more fish.

© 2021 | Johnson Outdoors Marine Electronics, Inc. | cannondownriggers.com

PAIRING A DEVICE TO A SINGLE DOWNRIGGER

Cannon offers an app that can be used to control and update the Cannon downrigger using a Bluetooth® enabled device. The Cannon app is available for download on iOS devices through the Apple App store or Android devices through the Google Play store.

The Cannon app can be used to control the downrigger using a device that is paired to the downrigger with a Bluetooth connection. Before pairing the device with the downrigger, the Cannon app should first be successfully downloaded. You can confirm that the app was successfully downloaded by opening it on your device. The Cannon downrigger will only be able to pair with **one** Bluetooth enabled device. It is recommended to review the "Connecting the Downrigger" section of these instructions to understand how the technology works together and understand how downriggers function in a network. If you are pairing a device to a single downrigger, it will automatically become the Master downrigger. If pairing to a series of downriggers, determine which downrigger will be the Master downrigger and then follow steps below and only work with the Master downrigger during this pairing process. The Master downrigger will be referred to as the BT Master.

The Cannon app icon. See the Cannon app section of these instructions (pg 88) for more information on how to control the downrigger on the app.

Cannon

NOTICE: Your device will only be able to connect to a Cannon and be paired if the device Bluetooth is enabled. Your device will only be able to pair with a Bluetooth enabled Cannon downrigger.

1

a. Download the Cannon app on the device you intend to pair with the downrigger. After downloading the app, open it to make sure the download was successful.

b. Once the opening screen launches, the app on your device will display a Pairing Guide. The guide will help you pair your Cannon downrigger.

c. Turn the Master Cannon downrigger "on", by pressing the Power button on the keypad.

d. Once the downrigger is powered "on", return to the device and select "Continue" from the Pairing Guide screen in the app.



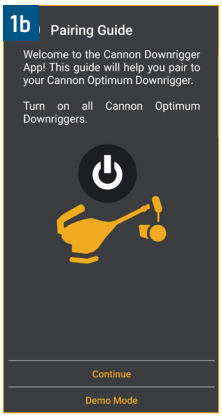



NOTICE: When opening the app if a "Downrigger Not Found" message appears, select "Retry Pairing Setup".

2

e. The Cannon app will begin the pairing process by helping to determine which downrigger is going to be assigned the Master downrigger. From the Pairing Guide, an option to Assign a BT Master will appear on the device. Select "Yes, Pair to BT Master" to continue.

NOTICE: The (Bluetooth) BT Master downrigger is the Master downrigger and needs to have all downriggers, phone, and transducer connected to it.

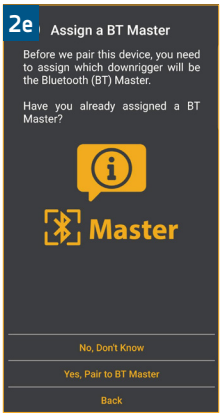

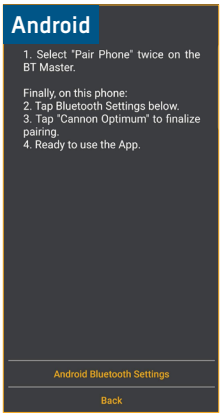

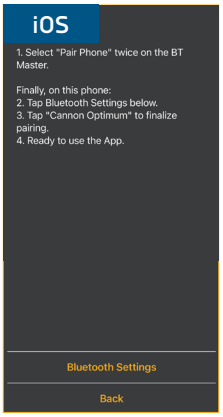

© 2021 | Johnson Outdoors Marine Electronics, Inc. | cannondownriggers.com

PAIRING A DEVICE TO A SINGLE DOWNRIGGER

3

f. From the Pairing Guide on the device, select "Bluetooth Settings" from the iOS device or "Android Bluetooth Settings" on the Android device. The Cannon app will redirect the Android device to its Bluetooth Settings and the iOS device to its Settings. On the iOS device open the Bluetooth Settings on the device. Turn Bluetooth on the device “on”, and keep your device on the Bluetooth screen.

g. Return to the downrigger being paired to the device. On the downrigger keypad, press the Menu button twice to bring up the Settings Menu on the Color LCD.

h. From the Settings Menu, use the Down button to scroll to the item listed Bluetooth. Press the Right button to open the Bluetooth Menu.

i. From the Bluetooth Menu, use the Down button to scroll to the Pair Phone option. Press the Right button to select it.

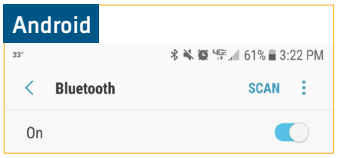

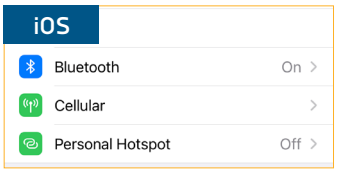

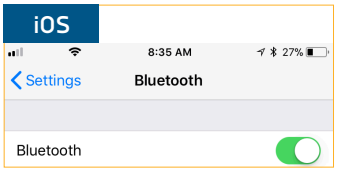

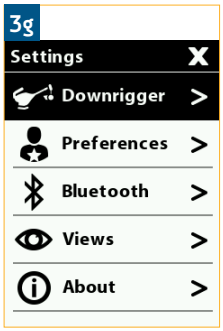

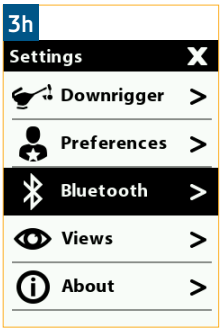

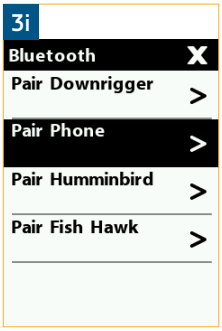

4

j. When Pair Phone is selected, it brings up the Pair Phone screen on the Color LCD. Press the Right button on the downrigger keypad to select "Pair Phone". This puts the downrigger in Pairing Mode.

k. Once in Pairing Mode, the downrigger will display "Pairing Phone...". Return to the mobile device and scan for new Bluetooth devices. If on an Android device, select the Scan button to begin the process on your device. On an iOS device, as soon as the Bluetooth Menu is opened, the scan starts automatically. When the Optimum is recognized by the device, it will appear on the device list. Select the Optimum or Optimum TS from the list of available devices.



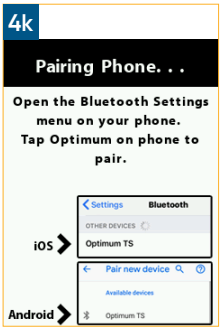

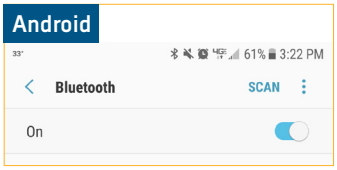

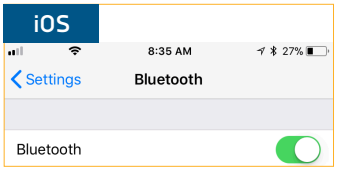

© 2021 | Johnson Outdoors Marine Electronics, Inc. | cannondownriggers.com

5

l. Once selected on the device list, the downrigger will send a 6 digit passkey to the device.

m. Check the device to make sure that the pass code on the downrigger Color LCD matches the pass key on the device. Confirm the passkey on the mobile device.

NOTICE: The pass key or code will be different every time the downrigger is paired with a device.

n. When the pass key is confirmed on the mobile device, the downrigger Color LCD will confirm that the connection was successful.

NOTICE: When the Bluetooth device is scanning for the Optimum, the downrigger must be in Pairing Mode. If the downrigger or the device time out, the process on both will need to be re-initiated.

o. In order for the device and your Optimum to stay connected, Bluetooth needs to remain "on". Once the device is paired with the Optimum, the device will connect and begin communicating with each other. When the Optimum is paired to the device and communicating with it, the Cannon app will automatically recognize that the downrigger is paired.

p. If the pair is unsuccessful, return to the Pair Phone Menu on the downrigger and put the downrigger and the device into pairing mode again at the same time and repeat the process.



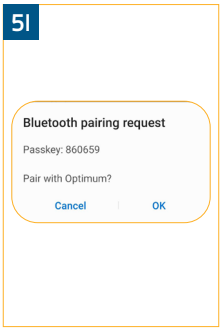

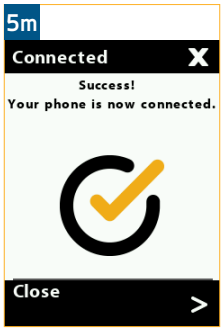

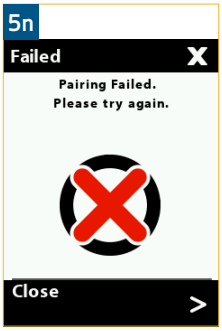

NOTICE: The downrigger will stay in Pairing Mode for 30 seconds. If the pass code is sent to the mobile device, but has not been confirmed on the device, the pair will not be successful. Try the Pairing again and be sure to confirm the pass code before the pairing times out.

NOTICE: When a device is paired with the downrigger, the paired device and downrigger know each other. When a paired device and a downrigger are connected they can actively communicate with each other. In order for the Cannon app to detect the downrigger, it needs to be paired and communicating with the downrigger.

NOTICE: It may take a few moments for your device to connect an the app to respond to the network even after it is connected.

PAIRING TWO DOWNRIGGERS TOGETHER

If your boat is set up with multiple downriggers, it is possible to pair up to 4 downriggers together in a network to share information and control the downriggers from a single device. Building a network requires pairing each downrigger with the Master downrigger and allows much of the data to be viewed across the network. Each downrigger paired to the Master downrigger is a Client downrigger. The Master downrigger will be the downrigger in the network that is paired to a device, and is able to be connected to a transducer or Fish Hawk X4D System. It is recommended to review the "Connecting the Downrigger" section of these instructions to understand how the technology works together and understand how downriggers function in a network. To pair two downriggers together follow the instructions below.

1

a. Determine which downrigger will be the Bluetooth Master. Turn both Cannon downriggers "on", by pressing the Power button on the keypad of each downrigger.

b. Then on both downriggers, press the Menu button twice to bring up the Settings Menu on both Color LCDs.

c. From the Settings Menu on both downriggers, use the Down button to scroll to the item listed Bluetooth. Press the Right button to open the Bluetooth Menu.

d. From the Bluetooth Menu on both downriggers, use the Down button to scroll to the Pair Downrigger option. Press the Right button to continue.

e. Both the Master and Client downrigger will display an Assign a BT Master on the Display Screen.



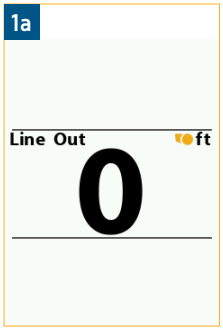

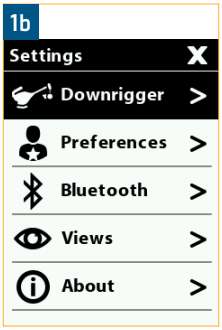

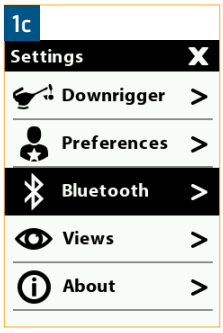

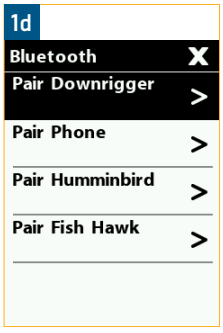

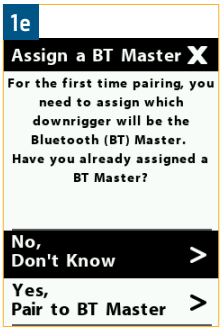

NOTICE: The Master downrigger is the downrigger that a mobile device, all downriggers and accessories, such as the Cannon transducer, Humminbird fish finder and Fish Hawk, will be paired to. The Client downrigger is the downrigger that will be paired to a Master downrigger.

2

f. From the downrigger that will be assigned to the BT Master, select "No, Don't Know" by pressing the Right button.

g. From the Client downrigger, use the Down button to scroll to the "Yes, Pair to BT Master" option. Press the Right button to continue.

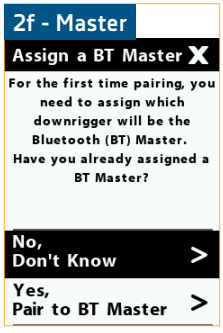

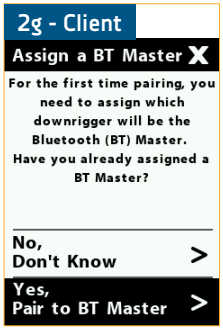

© 2021 | Johnson Outdoors Marine Electronics, Inc. | cannondownriggers.com

3

h. On the BT Master downrigger, the Color LCD will follow several on-screen prompts outlining criteria for the BT Master/Master downrigger. They include:

- The BT Master shares data to all the other downriggers in the network.
- An optional Fish Hawk probe can only be paired to the BT Master.
- The Cannon mobile app can only be paired to the BT Master.
- Cannon Transducer can only be connected to the BT Master.
- Compatible Humminbird can only be connected to the BT Master.

Press the Right (>) button to read and continue through these message screens.

i. The final screen will ask, "Which downrigger do you want to assign as the BT Master?" Press the Right (>) button to select "This downrigger".

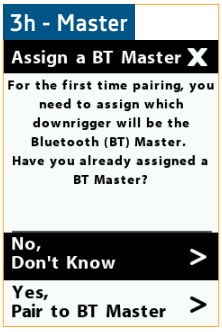











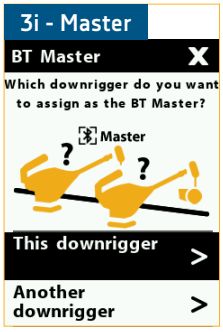

PAIRING TWO DOWNRIGGERS TOGETHER

4

j. On the Master downrigger, a Pair Downrigger screen will be on the Color LCD. Press the Right > button to select it. The Color LCD will bring up a "Pairing Downrigger...." message. The Master downrigger is now actively trying to pair with the Client Downrigger.

k. On the Client downrigger, a Pair to BT Master screen will be on the Color LCD. Press the Right > button to select it. The Color LCD will bring up a "Pairing Downrigger...." message. When this message displays, the Client downrigger is actively trying to pair to the Master downrigger.

l. Both downriggers will stay in Pairing Mode for 30 seconds. When they successfully connect, both downriggers will display a Connected message.



NOTICE: When two downriggers are paired to each other, they will be listed in each other's Device List under the Bluetooth Menu. When two Downriggers are paired, they know each other. In order for the downriggers to detect each other they need to be paired and communicating. When the downriggers are powered "on" and have been paired together, they can connect. When the downriggers are connected they can actively communicate. When the downriggers are powered "off" and have been paired together, they will know each other, but will not be actively communicating.

5

m. You can also confirm that the downriggers have paired to each other by finding them on the Device List under the Bluetooth Menu. The Master downrigger will appear on the Device List with a box around the Bluetooth icon.

NOTICE: The options listed in the Bluetooth Menu will be different once a downrigger is paired to another downrigger. On the Master downrigger, the option to pair with other downriggers, a device or a Fish Hawk will still be available. On a Client downrigger, the Bluetooth Menu will only allow you to view the Device List or Forget BT Master.

n. To pair additional downriggers to the Master downrigger, repeat the process with the Master downrigger and the new Client downrigger to be added to the network.

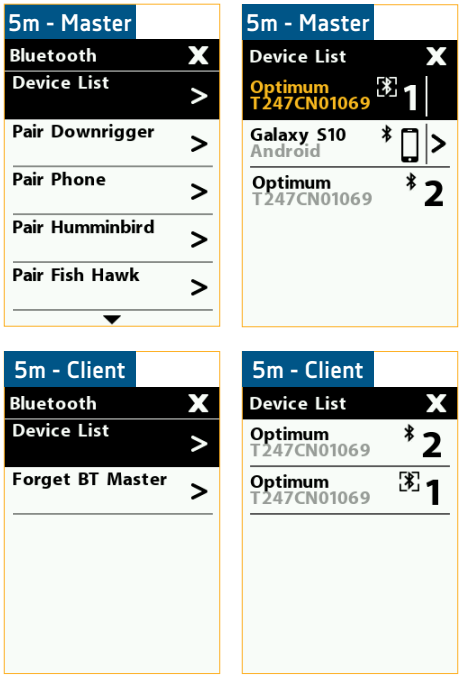

© 2021 | Johnson Outdoors Marine Electronics, Inc. | cannondownriggers.com

PAIRING THE MASTER DOWNRIGGER TO A HUMMINBIRD

Pairing a Humminbird to your Master downrigger will allow your downrigger to display features such as Bottom Tracking and give you remote control of your downriggers from the Humminbird display. It is important to install the latest software update on your Humminbird fish finder to enable Cannon features. For the SOLIX Series version 3.710 and later is required and for the HELIX G2N/ G3N Series version 2.250 and later is required. To check for compatibility or update your fish finder, please visit humminbird.com for details. The Humminbird must be paired with the Master downrigger. To pair a Humminbird, follow the steps below:

1

a. Make sure the Master downrigger is turned "on", by pressing the Power button on the downrigger keypad.

b. Power on the Humminbird fish finder "on".

On a Solix, press the HOME key. Select the Bluetooth tool. Under Cannon, select Cannon Settings. Select Pair Device.

On a Helix, press the MENU key twice. Select the Accessories tab. Select Bluetooth Cannon. Press the RIGHT Cursor key. Select Pair Device. Press the RIGHT Cursor key.

c. On the Master downrigger, press the Menu button twice to bring up the Settings Menu on the Color LCD.

d. From the Settings Menu, use the Down button to scroll to the item listed Bluetooth. Press the Right button to open the Bluetooth Menu.



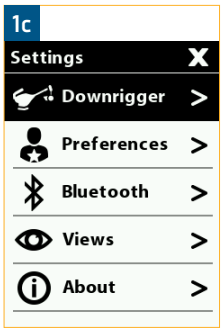

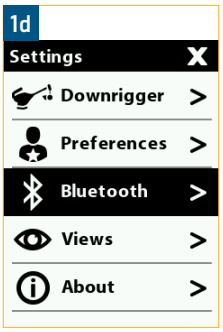

NOTICE: For more specific instructions on how to Pair and operate your Cannon downrigger on your Humminbird fish finder, please refer to the Owner's Manual. It can be found online at humminbird.com.

2

e. From the Bluetooth Menu, use the Down button to scroll to the Pair Humminbird option. Press the Right button to continue.

f. The Color LCD will bring up a "Pair Humminbird" screen. Use the Right button to confirm that you want to pair with the Humminbird.

g. While the downrigger is actively searching for the Humminbird, a "Pairing..." message will show on the Color LCD. Once the pairing is successful, a confirmation screen will appear and the Humminbird is successfully paired.

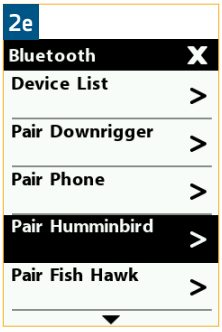





PAIRING THE MASTER DOWNRIGGER TO A FISH HAWK

Pairing a Fish Hawk™ X4D System to your Master downrigger will allow your downrigger to display true running depth and the speed of your weight, the temperature at the weight, plus surface temperature and speed. The Fish Hawk must be paired with the Master downrigger. To pair a Fish Hawk, follow the steps below:

1

a. Make sure the Master downrigger is turned "on", by pressing the Power button on the downrigger keypad.

b. Power on the Fish Hawk X4D Display. Once powered on the Display will continuously transmit and wait for another device to be connected.

NOTICE: The Fish Hawk X4D System must be paired with the Master downrigger. The Fish Hawk X4D System is the ONLY compatible Fish Hawk System to pair with the downrigger. Other Fish Hawk Systems will not be compatible with the Optimum or Optimum TS downrigger.

c. On the Master downrigger, press the Menu button twice to bring up the Settings Menu on the Color LCD.

d. From the Settings Menu, use the Down button to scroll to the item listed Bluetooth. Press the Right button to open the Bluetooth Menu.



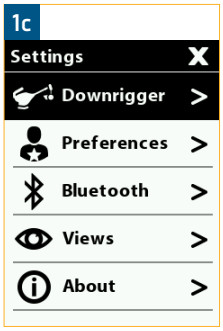

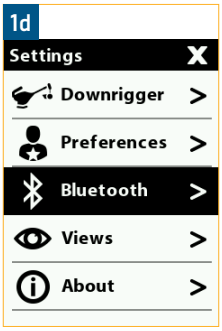

2

e. From the Bluetooth Menu, use the Down button to scroll to the Pair Fish Hawk option. Press the Right button to continue.

f. The Color LCD will bring up a "Pair Fish Hawk" screen. Use the Right button to confirm that you want to pair with the Fish Hawk.

g. While the downrigger is actively searching for the Fish Hawk, a "Pairing Fish Hawk..." message will show on the Color LCD. Once the pairing is successful, a confirmation screen will appear and the Fish Hawk is successfully paired.

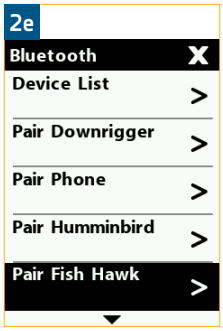





NOTICE: Once the downrigger is paired to the Fish Hawk, both need to be powered on in order for them to communicate. If you wish to remove the Fish Hawk to rebuild the network, or assign a new Master downrigger, you must clear the network on the downrigger and re-pair the Fish Hawk with the new Master downrigger.

© 2021 | Johnson Outdoors Marine Electronics, Inc. | cannondownriggers.com

FORGETTING A DOWNRIGGER ON A DEVICE

Once an Optimum is paired to a device, it will remember the downrigger, even if the device and the downrigger are not actively communicating. In some cases, it may be necessary to clear the memory of the device and forget any paired downrigger. To do this, use the Bluetooth settings on the device.

1

a. Open the Bluetooth settings on the device.

b. A list of paired devices will appear. The appearance of the list from an Android to an iOS device will look different.

c. On an Android device, select the Settings ⚙ icon next to the device in the list of Paired Devices. When the next screen appears, find the option to Unpair the device and select it.

d. On an iOS device, select the "i" ⓘ icon next to the device in the list of My Devices. When the next Screen appears, find the option to Forget this Device and select it.

e. Once the device is unpaired or forgotten, the device is no longer paired or communicating with the device and will not be visible to the Cannon app or the device.

NOTICE: Images are for illustrative purposes and may vary based on your device and operating system.

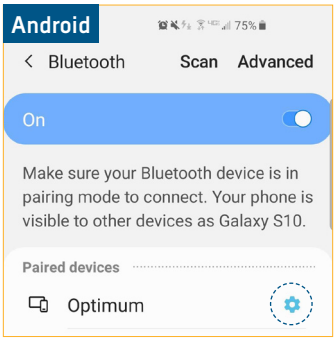



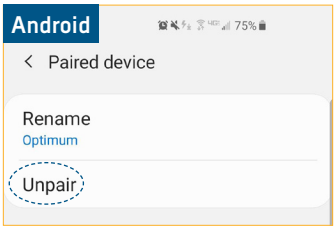

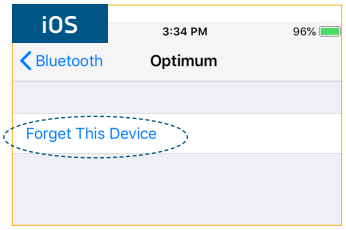

FORGETTING A DEVICE, HUMMINBIRD, FISH HAWK OR DOWNRIGGER ON A DOWNRIGGER

Once a device is paired to a Optimum, it will remember the device, even if the device and the downrigger are not actively communicating. This is also true for two downriggers paired together or a downrigger paired to a Humminbird fish finder or Fish Hawk X4D System. In some cases, it may be necessary to clear the memory of the downrigger and forget any paired devices or downriggers. To do this, use the Settings Menu on the downrigger.

NOTICE: To remove a specific device, Fish Hawk, Humminbird or downrigger from the downrigger network, remove them one at a time by using the options in the Device List. To remove everything paired to a specific downrigger, follow the "Clearing the Downrigger Network" section of these instructions.

1

a. Turn the Master downrigger "on", by pressing the Power button on the keypad.

b. On the downrigger keypad, press the Menu button twice to bring up the Settings Menu on the Color LCD.

c. From the Settings Menu, use the Down button to scroll to the item listed Bluetooth. Press the Right button to open the Bluetooth Menu.

d. From the Bluetooth Menu, use the Down button to scroll to the Device List option. Press the Right button to continue.

e. From the Device List, select the device, Humminbird, Fish Hawk or downrigger that the downrigger should forget. Use the Down button or the Up button to scroll to it in the list. Use the Right button to select it.

f. Once selected, the downrigger Color LCD screen will bring up a Forget Phone, Forget Humminbird, Forget Fish Hawk or Forget Downrigger screen. Use the Right button to Confirm that the downrigger should forget the equipment selected.

g. The downrigger will flash a message Phone Removed, Humminbird Removed, Fish Hawk Removed or Downrigger Removed to confirm it was deleted from memory.

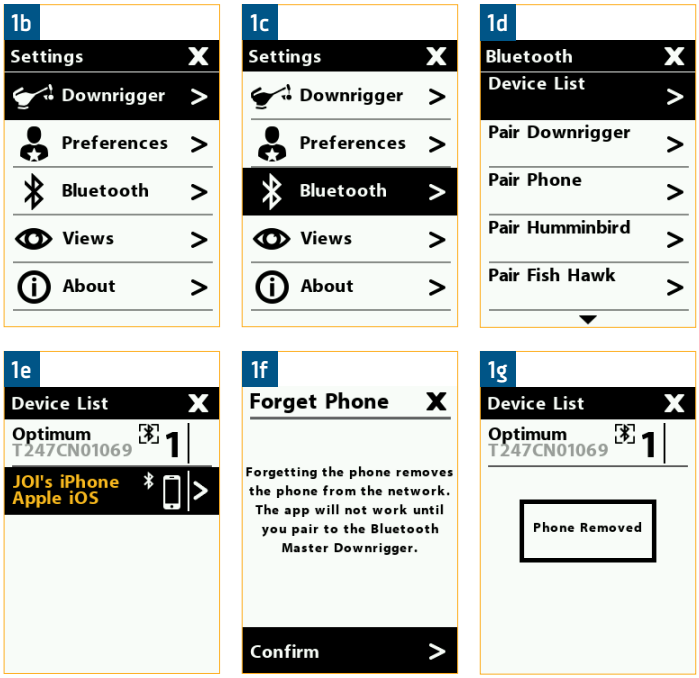

NOTICE: Forgetting the phone, Humminbird, Fish Hawk or downrigger removes them from the network. The Cannon app will not work until you pair the device with the Cannon app to the Bluetooth Master downrigger.

NOTICE: To exit the menu, press the Close button on the downrigger keypad.

© 2021 | Johnson Outdoors Marine Electronics, Inc. | cannondownriggers.com

CLEARING THE DOWNRIGGER NETWORK

Once a device or downrigger is paired to a Optimum, it will remember them, even if the device or downrigger are not actively communicating with the downrigger they are paired with. In some cases, it may be necessary to clear the memory of the Master downrigger and forget any paired devices and downriggers on the Fish Hawk. To do this, use the Settings Menu on the Master downrigger. Devices on a Cannon network may include the Fish Hawk 4XD System, another downrigger, or a paired device. Restoring the network on the downrigger is helpful when creating a new network or assigning a new Bluetooth Master. Restoring the network helps to clear everything that is paired all at once. If you wish to clear only one specific paired item on the network, use the instructions for "Forgetting a Device, Humminbird, Fish Hawk or Downrigger on a Downrigger" section of these instructions.

1

a. Turn the Master downrigger "on", by pressing the Power button on the keypad.

b. On the downrigger keypad, press the Menu button twice to bring up the Settings Menu on the Color LCD.

c. From the Settings Menu, use the Down button to scroll to the item listed Bluetooth. Press the Right button to open the Bluetooth Menu.

d. From the Bluetooth Menu, use the Down button to scroll to the Restore Network option. Press the Right button to continue.

e. Once selected, the downrigger Color LCD screen brings up a Restore Network screen. Use the Right button to Confirm that the downrigger should forget all devices on the network.

f. The downrigger will flash a message Network Restored to confirm that all devices and downriggers were deleted from memory.

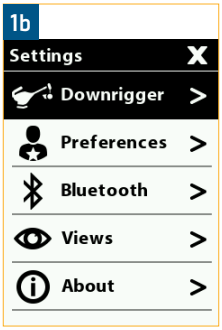

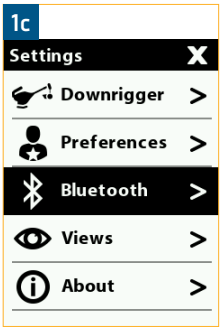

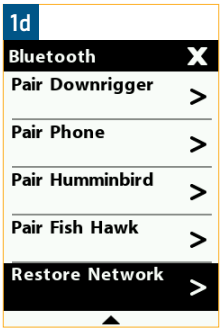





CLEARING THE MASTER DOWNRIGGER FROM THE CLIENT DOWNRIGGER

It may be necessary to remove a Client downrigger from the network. This can be accomplished without interrupting the rest of the network simply by removing the Master downrigger from the Client downrigger. This may be helpful when moving one Client downrigger to a different network, or replacing one downrigger in an existing network with a new one.

1

a. Turn the Client downrigger "on", by pressing the Power button on the keypad.

b. On the downrigger keypad, press the Menu button twice to bring up the Settings Menu on the Color LCD.

c. From the Settings Menu, use the Down button to scroll to the item listed Bluetooth. Press the Right button to open the Bluetooth Menu.

d. From the Bluetooth Menu, use the Down button to scroll to the Forget BT Master option. Press the Right button to continue.

e. Once selected, the downrigger Color LCD screen bring up a Forget BT Master screen. Use the Right button to Confirm that the downrigger should forget the Master downrigger.

f. The downrigger will flash a message Downrigger Removed to confirm that it was deleted from memory.



NOTICE: Forgetting the Master downrigger will remove this downrigger from the network.

© 2021 | Johnson Outdoors Marine Electronics, Inc. | cannondownriggers.com

UPDATING THE CANNON APP & DOWNRIGGERS IN A NETWORK

Any updates to the Optimum downrigger will be made through the Cannon app from a paired Mobile Device. If the downrigger is not connected to a device, refer to the "Pairing a Device to a Single Downrigger" section in these instructions. Before updating the downrigger, check for updates to the Cannon app on the Mobile Device by looking for updates on iOS devices through the Apple App store or Android devices through the Google Play store. Any updates to the Cannon app need to be completed before continuing to check in the app for updates to the downrigger software. Be sure that the downrigger is paired and communication with the Mobile Device and that all downriggers are powered "on". When updating a downrigger that is paired to other downriggers, it is best to send the update to the Master downrigger. The Master downrigger will push the update to the paired Client downriggers it is networked with. See the Cannon app section of these instructions (pg 85) for more information on how to use the Cannon app.

1

a. Open the Cannon app on the Mobile Device.

NOTICE: If you are not connected to the downriggers, you may select "Demo Mode" in the Cannon app to reach the Software Updates option. You may then Select the grayed out Optimum to identify current installed version or newest available update.

b. From the app, open the Menu by pressing the Menu button. The Menu button is found in the upper left corner of the app.

c. From the Menu, select the Software Update option.

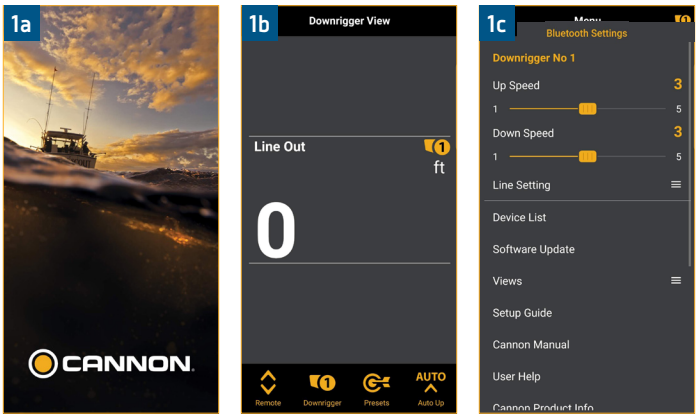

2

d. In the Software Update screen, the app will identify if an update is available. It will also list all downriggers in the network and what version of software they contain. If an update is identified, it will display a "Download" button. Select the update button to Download the update to the Cannon app.

e. If the update to the Cannon app contains a software update for the Cannon Optimum downrigger, the Software Update screen will then display a "Transfer" button. Double check that the Optimum downriggers are powered on and all connected to the network.

NOTICE: Downriggers must be powered on to accept software updates.

f. Selecting the "Transfer" button will transfer the software update for the Optimum to the downrigger.

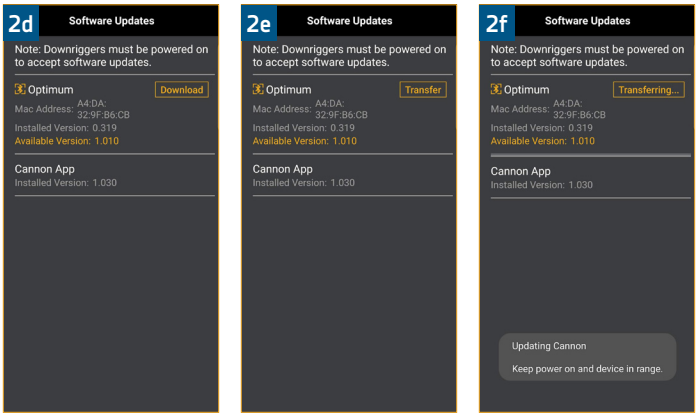

NOTICE: Downloading the update to the mobile device requires to be connected to WiFi or cellular data. Once the new update has downloaded to the device, transferring the update to the downrigger can be done without WiFi or cellular data, through the network.

UPDATING THE CANNON APP & DOWNRIGGERS IN A NETWORK

3

g. Both the Cannon app and the downrigger will alert that the software update is transferring to the downrigger.

h. When the update has completed transferring to the downrigger(s), the downrigger(s) will reboot. The Master downrigger will communicate the update transferred from the Cannon app to all paired Client downriggers.

NOTICE: Do not interrupt power during software update. Downrigger will reboot once installation is complete.

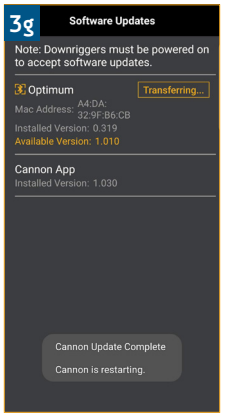

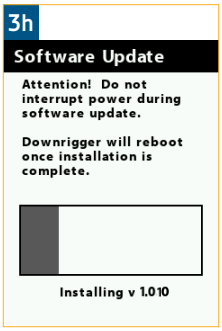



© 2021 | Johnson Outdoors Marine Electronics, Inc. | cannondownriggers.com

FISHING WITH THE DOWNRIGGER

CONNECTING THE CANNON TRANSDUCER

The Cannon Transducer (Item #1491072) is an optional accessory available for your Optimum and Optimum TS downrigger. By installing the Transducer, the Optimum is able to display water depth and use the Bottom Track feature. Proper transducer installation is critical to the performance of the Bottom Tracking feature. For best results, follow all mounting instructions included with the Cannon Transducer carefully, before beginning the directions below, to connect the Transducer to the Optimum downrigger.

NOTICE: Power to the Optimum should be turned "off" before installing the Cannon Transducer.

Once the Transducer is installed according to the provided instructions, route the Transducer Cable to your downrigger. When routing the Transducer Cable give consideration to the following:

⚠ WARNING

Cutting, splicing or shortening of the Transducer Cable, including removing the connector, voids the product warranty.

- Route the Transducer Cable in a way that will not cause damage to the cable jacket.
- Keep the Transducer Cable away from ignition, tachometer, alternator and other electrical wiring to prevent interference.
- Do not cut, splice or shorten the Transducer Cable. Coil the excess cable into a loop like a figure 8 and loosely secure it in place where it will not be a tripping hazard or be damaged from external forces. Do not kink the cables.
- Connecting the Cannon Transducer to a Bluetooth enabled downrigger that is networked to one or more downriggers will make it the Master downrigger. If a Master downrigger already exists in the downrigger network, connecting the transducer to any other downrigger in the network, except for an existing Master downrigger will disrupt the network. See the "Connecting the Downrigger" section of these instructions for more information on downrigger connectivity and Master downriggers.

1

a. Before connecting the Cannon Transducer to the Optimum, make sure that the Optimum downrigger is turned "off".

NOTICE: The Transducer Cable should be connected before the downrigger is powered "on".

b. Review the Transducer Cable routing considerations above and route the Transducer Cable in the boat so that is reaches the downrigger following the guidelines provided.

c. Locate the Transducer Input on the bottom side of the downrigger body. The Transducer Input is located just to the left of where the Power Cable exits the downrigger body. The Transducer Input is covered by a tethered Cap to keep the downrigger body water tight. Remove the Cap so that the Transducer Cable from the Cannon Transducer can be plugged in.

d. Examine the Transducer Input and the end of the Transducer Cable coming from the Cannon Transducer. Notice how the connection is keyed. Align the keys and press the connection firmly together.

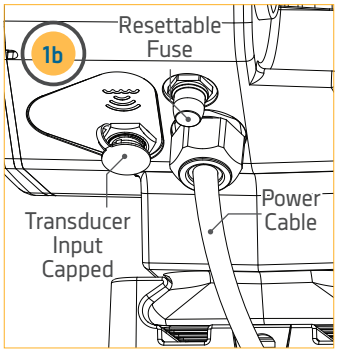

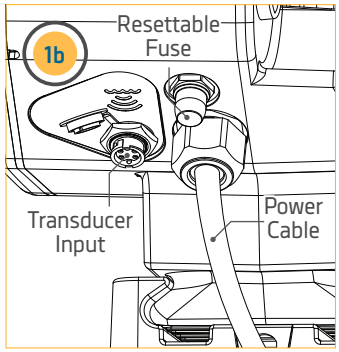

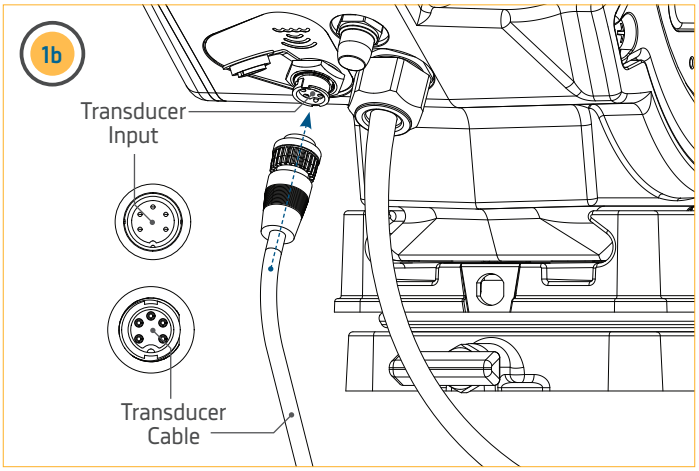

ATTACHING THE SNAP ASSEMBLY WITH INSULATOR

The Snap Assembly with Insulator is used to break any electrical connection between the downrigger and the water. This insulator is used with the Short Stop and Positive Ion Control features of the downrigger.

Short Stop is a Cannon exclusive feature that automatically stops the weight at the water's surface, preventing the lift motor from raising it into the pulley at the end of the boom. When the downrigger line is in the water, a small electrical current flows between the line and grounded metal boat components in the water. When the line clears the water, the current flow stops. The Short Stop system senses this interruption and turns off the motor. The trolling weight insulator is used to break the line contact to the water while the weight is still in the water. Stopping the weight at water level eliminates the line strain caused by a bouncing weight or a weight hitting the boom end and it also prevents the weight from swinging into the boat hull. This feature comes on all Cannon electric downriggers and requires the boat to be properly grounded and the use of an electrically conductive cable such as stainless steel. This feature will not work with mono or braided lines.

Positive Ion Control is a feature that is based on the principle that applying a low voltage positive electrical field into the water where you're fishing will attract fish and increase your chances to catch more fish. Since fish are attracted by a slight positive charge and repelled by a strong positive or negative charge, generating and controlling the correct charge can be critical to the success of your fishing. When PIC is turned on and the downrigger is spooled with line that can conduct an electrical current, the insulator helps to break the connection with the water so that the positive electrical field emitting from the downrigger line is broken.

1

Item(s) needed:



#34 x 1

a. Before attaching the Snap Assembly with Insulator, complete the Terminating the Downrigger section of these instructions. The properly terminated line can have a weight attached directly to it.

b. To begin, make sure that a weight is not attached to the Snap Swivel. Then take the Snap Assembly with Insulator (Item #34) and attach it to the Snap Swivel.

c. The Weight can then be attached to the Snap Assembly with Insulator.

NOTICE: In some cases it may be necessary to use two Snap Assembly with Insulators connected consecutively to break the electrical connection with the water.

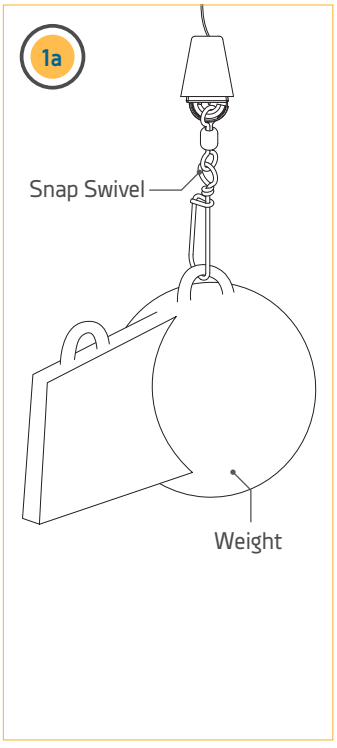

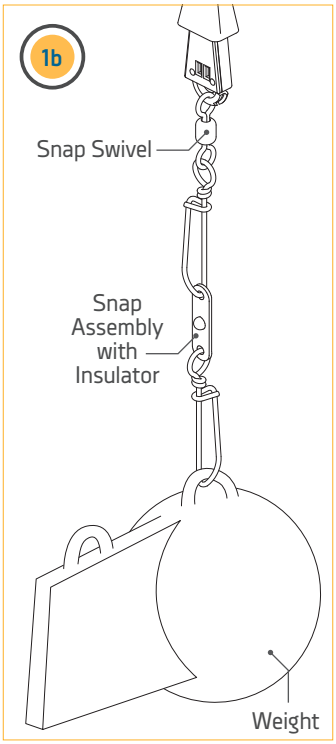

⚠ CAUTION

Do not overload the downrigger. It is designed to retrieve a maximum of 20 lb. weights only.

© 2021 | Johnson Outdoors Marine Electronics, Inc. | cannondownriggers.com

ATTACHING A LINE RELEASE

The last step in prepping the downrigger for fishing is to attach a Line Release. To attach the Line Release, first attach a Cannon Weight and then follow the steps below:

To watch a video on how to attach a Line Release, follow the link on-line at https://youtu.be/qpONbVgbbt8

1

Item(s) needed:

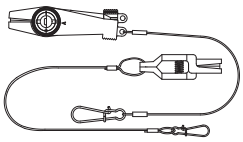

#J or S x 1

a. Take the Release (Item #J or #S) and attach the Snap Lock end of the Line Release to the Weight.

b. Release some line from the fishing rod and reel so that the lure is anywhere from 5 to 100 feet behind the boat. Determine a distance for the line from the fishing pole to drop back from the Weight and select a point for the line to be attached.

c. Twist a loop in the fishing line at the point that the line would be attached. Attach the line from the fishing rod firmly into the Clamp of the Line Release at the loop created in the fishing line.

d. Click through a series of increasing tension settings on the Clamp. The Line Release can be used with any test line on salt or fresh water and may be adjusted from 2 to 22 pounds of grip tension on the line.

e. Once the Line Release is attached to the fishing line, make sure the Fishing Rod is held securely or placed in a holder and open the reel so that line can draw out.

f. Then set the downrigger depth to lower the Weight to the desired depth in the water.

g. Once the downrigger Weight is at the desired depth, reel up the slack on the fishing line so that your fishing rod has a slight bend in it. When a fish strikes the lure, the line will separate from the Line Release. Then the fishing line will be free to fight the fish and bring it up on the rod and reel.

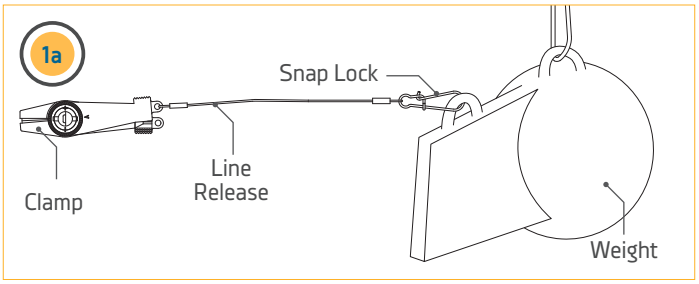

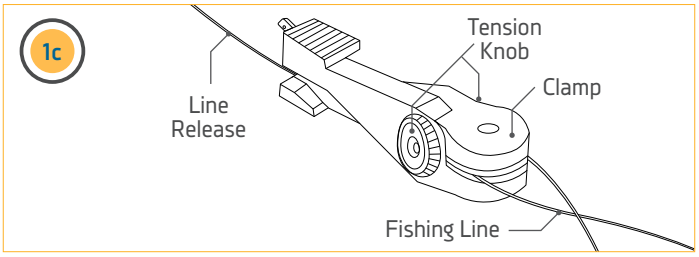

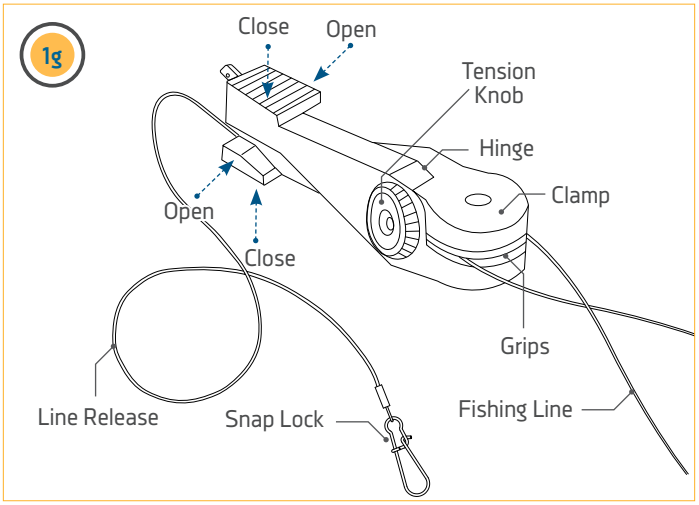

NOTICE: To change the Freshwater Line Release tension, turn the Tension Knob towards (+) to increase or (-) to decrease. Tension also may vary according to where the line is placed in the Grips of the Clamp. Higher tension is on the line if it is set back toward the Hinge, and lower if set closer to the opening. To open the Line Release, spread the Release Arms with thumb and forefinger applying pressure to the sides.

SAFE TRANSPORT

When done fishing with the downrigger it is recommended to store the downrigger and its parts securely for transport. Use common sense when transporting the downrigger and secure all loose or moving parts. Best practices include but are not limited to the following:

- Secure the Telescopic Boom so that the telescopic feature is adjusted to be as short as possible. See the "Adjusting the length of the telescopic boom" section of this manual for details.
- Pull the Release Knob, if installed, and rotate the Downrigger on the Swivel Base so that the Telescopic Boom is rotated Inboard on the boat.
- Make sure that the Release Knob on the Swivel Base is secured in place.
- Remove the Line Release and store in a secure location.
- Secure the Weight and Line on the Ball Hook or remove the Weight and place in a secure location and tighten the downrigger Line.
- Make sure any routed cables such as connected transducers or accessories and power cables are secured and routed in a way that they will not pose a tripping hazard.

Telescopic Boom

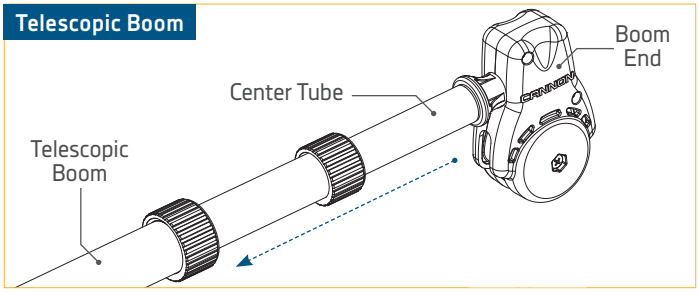

Inboard

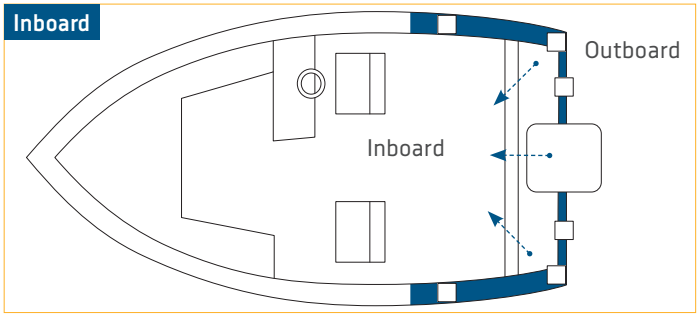

Line Release

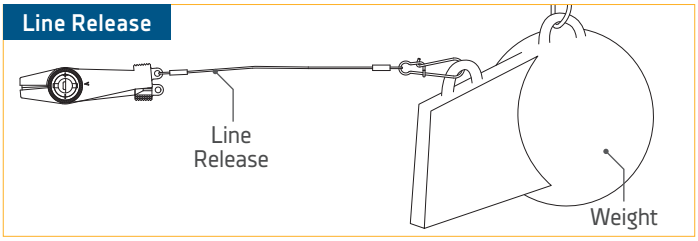

Release Knob

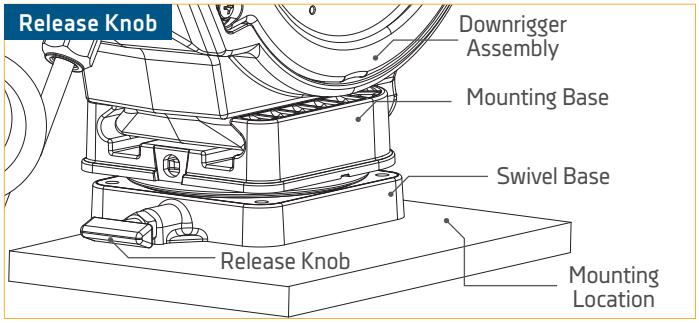

Cables

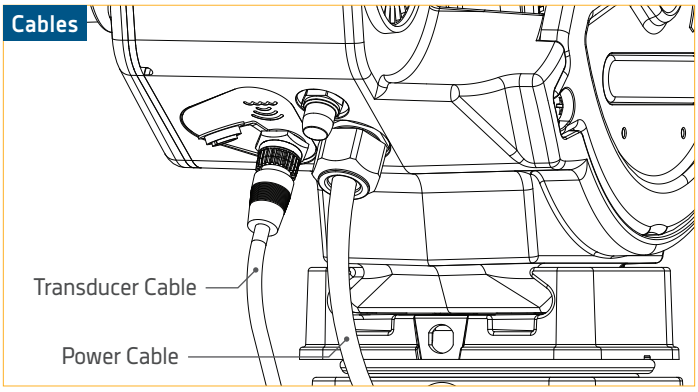

Ball Hook

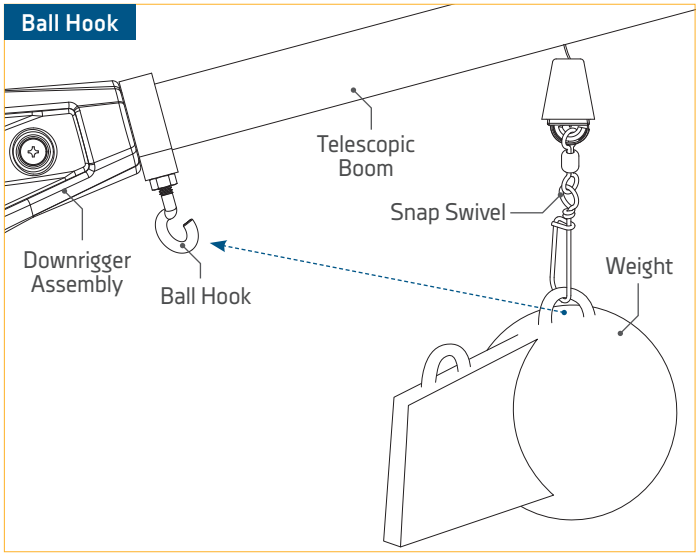

© 2021 | Johnson Outdoors Marine Electronics, Inc. | cannondownriggers.com

USING THE DOWNRIGGER

CONTROLLING THE OPTIMUM™ AND OPTIMUM™ TS

Understanding the features the Optimum and Optimum TS provide to your fishing experience will greatly affect the benefit the downrigger provides. Become familiar with how to control the downrigger from the keypad to discover control menus and customize the product to fit your fishing needs. This section of the manual will explain the following features:

- Waterline Zero
- Preset Depths & Last Depth Recall
- Bottom Tracking
- Depth Cycling
- Positive Ion Control
- Short Stop
- Soft Stop

⚠ WARNING

Do not touch the Spool while the downrigger is in use.

WATERLINE ZERO

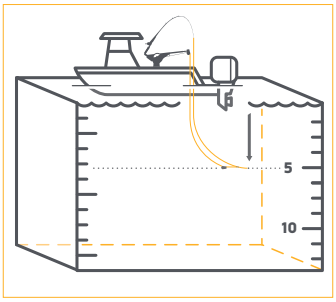

Waterline Zero is a feature that gives the downrigger the ability to set the Line Counter to zero when the weight is in any position. This is helpful to accommodate for variations in line length as it is cycled up and down on the Spool. It also gives the downrigger the ability to set the Waterline Zero based on difference in distances from the water to the boat hull accommodating water conditions and the ability to move a downrigger from one boat to another. Many prefer to set the Waterline Zero to just below the actual surface of the water. When using the Auto Up button, the downrigger will automatically retrieve the weight to the set Waterline Zero. This convenient line counter reset accommodates many possibilities to give full control over downrigger functionality and weight positioning preferences.

WATERLINE ZERO

NOTICE: If the Line Counter on the downrigger is at a negative number, the downrigger Weight has been retrieved and pulled higher than Waterline Zero.

SETTING WATERLINE ZERO

1

a. With the downrigger "on", press the Menu button once to bring up the Quick Menu. The downrigger can scroll through several Views. The title on the Quick Menu will correspond to the View that the downrigger was currently displaying when the Menu button was selected.

b. From the Quick Menu, use the Down button to scroll to the item listed Water Zero. Press the Right button to select Water Zero.

c. The Color LCD will show a Water Zero message that the line counter has been reset to zero. Use the Right button to select Confirm. Once confirmed, the menu will close and the Color LCD will return to the View that was previously displaying.







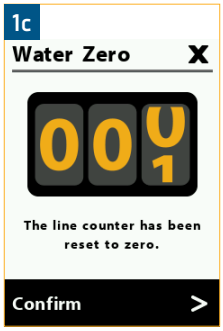

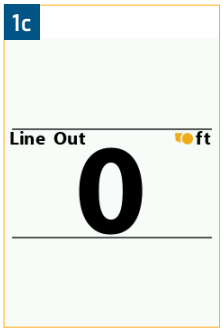

PRESET DEPTHS & LAST DEPTH RECALL

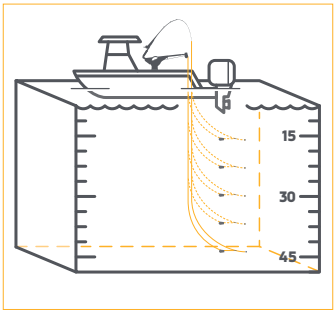

The Optimum and Optimum TS allows users to save up to 5 preset depths. The Preset Depth Menu allows the user to recall these presets and automatically control the weight and let line in or out to the Preset Depth. The downrigger can also move from one preset depth to another by selecting one of the programmed Preset Depths. The downrigger will have Preset Depths already programmed. The pre-programmed presets are 25, 50, 75, 100 and 150 feet. The Preset Depths can be set in a range from anywhere between 0 and 370 feet, but they can be changed to any depth within the limits of the amount of line the downrigger is equipped with. If changing Preset Depths keep the amount of line on the spool in mind when setting depth preferences. Also take consideration of the bottom depth of your fishing area.

PRESET DEPTHS

⚠ CAUTION

When setting a Preset Depth, the limit must not exceed the length of the line on your spool. Running out the line completely will result in back spooling or loss of line.

© 2021 | Johnson Outdoors Marine Electronics, Inc. | cannondownriggers.com

PROGRAMMING A PRESET DEPTH

1

a. With the downrigger powered "on", press the Menu button twice to bring up the Settings Menu on the Color LCD.

b. From the Settings Menu, use the Down button to scroll to the item listed Downrigger. Press the Right button to open the Downrigger Menu.

c. From the Downrigger Menu, use the Down button to scroll to the item listed Depth Presets. Press the Right button to open the Depth Presets Menu.

d. From the Presets Menu, use the Up button or the Down button to scroll to the Preset Depth you would like to set. Press the Right button or the Left button to adjust the range from 0 to 370 feet. Single pressing the Right or Left buttons will increment the range in one foot increments. Continuing to press and holding the Right or Left buttons will continue to change the depth until the buttons are released.

e. Press the Exit button to close the menu.

NOTICE: There are 5 Preset Depths can be set in a range from anywhere between 0 and 370 feet, but it is also limited to the amount of line on the downrigger spool. If changing Preset Depths, keep the amount of line on the spool and bottom depth in mind when setting depth preferences.

1a Keypad on Optimum

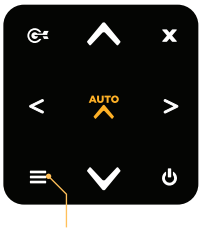

1b

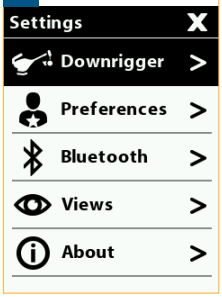

1c

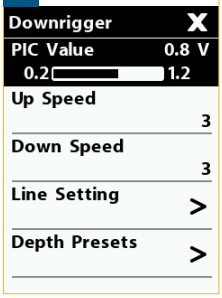

1c

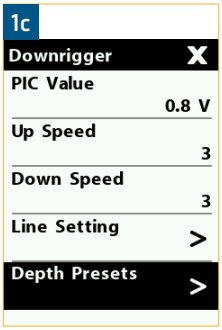

1d

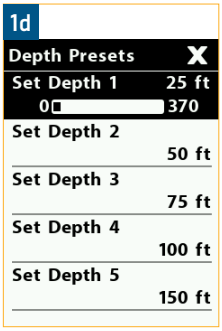

1d

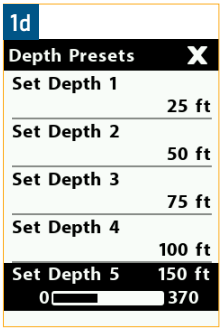

1d

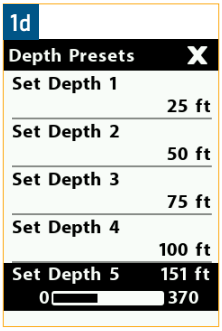

1e Keypad on Optimum

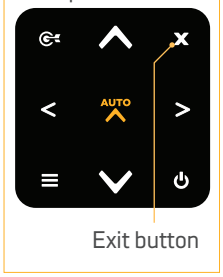

SETTING THE DOWNRIGGER TO A PRESET DEPTH

1

a. With the downrigger powered "on", press the Preset Depth button to bring up the Preset Depths Menu on the Color LCD.

b. From the Preset Depths Menu, use the Down button or the Up button to scroll to the Preset Depth desired.

c. Once at the desired depth, press the Right button or the Preset Depth button once again to move the downrigger weight to the selected depth. Once selected the downrigger will automatically begin to move to the selected depth.

NOTICE: The first option in the Preset Depth Menu is the Last Depth Recall. It appears after the Auto Up button is selected for the first time. It is marked by a fish icon. The Preset Depths are marked with a number from 1 to five that switches to an icon that matches the Preset Depth button on the keypad when scrolled to in the menu list.

NOTICE: When setting the downrigger to a Preset Depth, give consideration to the amount of line on the spool and the bottom depth at the current fishing location.

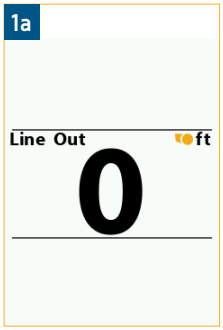

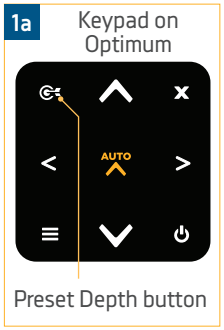

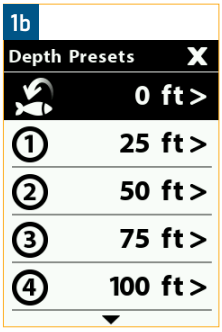

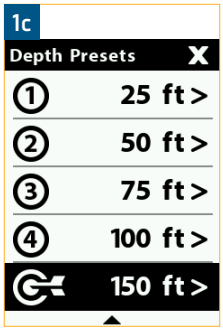

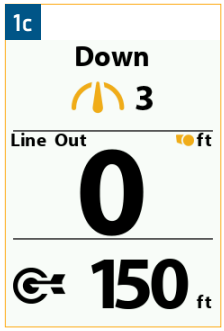

© 2021 | Johnson Outdoors Marine Electronics, Inc. | cannondownriggers.com

WORKING WITH THE DOWNRIGGER AND LAST DEPTH RECALL

Last Depth Recall is a downrigger feature that allows the downrigger to recall the last depth that the downrigger was set to when the Auto Up button was selected. When fishing with the downrigger, it is beneficial to reel in the line when a fish is on after the fish has pulled the fishing line out of the Line Release. The Auto Up button is used on the keypad to retrieve the downrigger weight up and away from the fish to allow the operator to attend to the fish on and the rod. When a fish is on, pressing the Auto Up button records into memory the depth of the weight when the button was hit and automatically brings in the line. This feature is beneficial because using Last Depth Recall will return the weight to the trolling depth that the weight was set at when the fish was caught, easily putting your weight and bait back into the target zone.

1

a. With the downrigger powered "on", press the Preset Depth button to bring up the Preset Depths Menu on the Color LCD.

b. From the Preset Depths Menu, use the Down button or the Up button to scroll to the Last Depth Recall option, marked with a fish icon.

c. Once at the Last Depth Recall press the Right button to move the downrigger weight to the last depth. Once selected the downrigger will automatically begin to move to the last depth.

1a

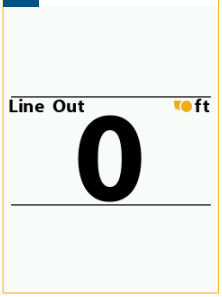

1a Keypad on Optimum

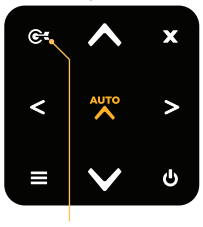

Preset Depth button

1c

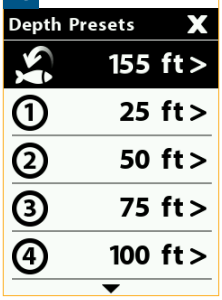

NOTICE: The first option in the Preset Depth Menu is the Last Depth Recall. It is marked by a fish icon. Double pressing the Preset Depth button twice consecutively automatically sends the weight to the Last Depth Recall.

BOTTOM TRACKING

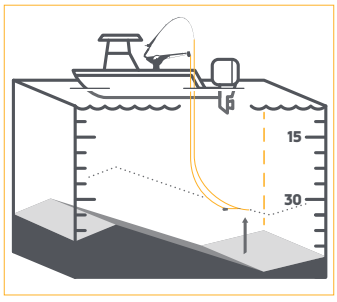

The Bottom Tracking feature is designed to help you fish consistently near the bottom. This mode of operation requires an optional sonar transducer attached to your downrigger. In Bottom Tracking Mode, the downrigger is designed to maintain the weight at a fixed distance above the bottom. In order to avoid continuous weight adjustments due to minor changes in bottom depth and boat motion caused by wave action, you have the ability to adjust the responsiveness of the weight. Bottom Tracking can be adjusted to fit user trolling preference. The Offset Distance setting can be adjusted between 50 and -50. The negative offset accounts for blowback while running the downrigger at high trolling speeds. The Offset Distance is the distance that the weight should be from the bottom depth. Sensitivity can be set from 1 to 16 feet. The Sensitivity adjusts the responsiveness of the Bottom Tracking feature. The more sensitive, the higher the distance and the more the weight will react to minor changes to bottom depth or the motion of the boat due to wave action. For calmer conditions start at lower Sensitivity settings. The default Offset Distance is 10 ft and the default Sensitivity is 6 ft.

BOTTOM TRACKING

⚠ CAUTION

In order to keep the weight from touching or dragging on the bottom, make sure that the depth range selected is appropriate for the amount of line on the Spool and the amount of blowback experienced during operation at the intended depth and selected offset distance.

⚠ CAUTION

When setting Bottom Tracking, the depth must not exceed the bottom depth of the area you are fishing and/or the length of the line on your spool. Running out the line completely will result in back spooling or loss of line.

TURNING BOTTOM TRACKING ON

1

a. With the downrigger "on", press the Menu button once to bring up the Quick Menu. The downrigger can scroll through several Views when operating. The title on the Quick Menu will correspond to the View that the downrigger was currently displaying when the Menu button was selected. The items in the Quick Menu will vary depending on the features that the downrigger is running and what view the Color LCD is set to.

b. From the Quick Menu, use the Down button to scroll to the item listed Bottom Tracking. There is a toggle switch located on the Bottom Tracking Menu option. Press the Right button to toggle Bottom Tracking "on".

c. When Bottom Tracking is toggled "on" the Bottom Tracking Menu will open. Bottom Tracking settings of Offset Distance and Sensitivity will appear in the Bottom Tracking Menu. Use the Up button and the Down button to scroll to the options in the list and use the Right button and the Left button to adjust the settings. Adjust the Bottom Tracking settings as desired and then use the Up button or the Down button to scroll to the Start option. Use the Right button to select it.

d. When Bottom Tracking is started, the downrigger Color LCD will return to the View it was previously displaying and will display Bottom Tracking info based on the settings selected.

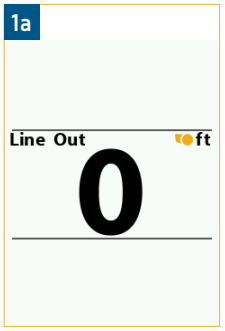





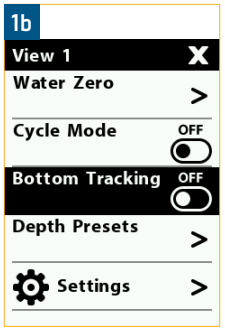

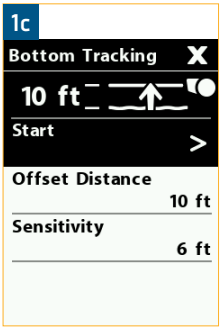

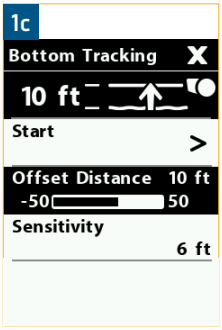

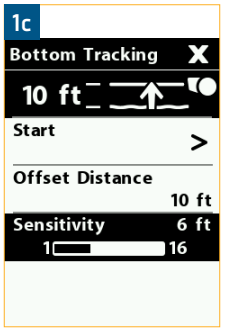

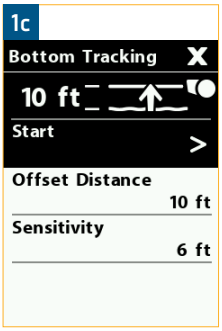

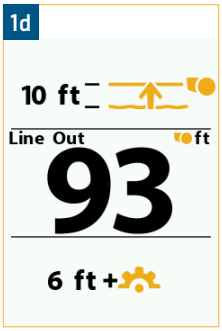

NOTICE: When setting Bottom Tracking, the maximum depth is 30 feet less than the cable length for the Line on Spool setting. To avoid running out the cable, make sure that the Line on Spool setting is accurate.

© 2021 | Johnson Outdoors Marine Electronics, Inc. | cannondownriggers.com

TURNING BOTTOM TRACKING OFF

1

a. With the downrigger "on", press the Menu button once to bring up the Quick Menu. The downrigger can scroll through several Views. The title on the Quick Menu will correspond to the view that the downrigger was currently displaying when the Menu button was selected.

b. From the Quick Menu, use the Down button to scroll to the item listed Bottom Tracking. There is a toggle switch located on the Bottom Tracking Menu option. Press the Right button to toggle Bottom Tracking "off".

c. Use the Exit button to close the Quick Menu and return to the View that was previously displayed.

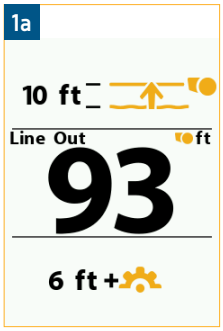



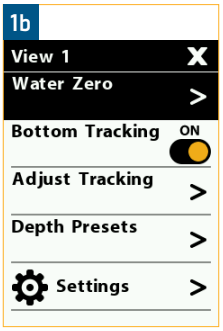





ADJUSTING OFFSET DISTANCE FOR BOTTOM TRACKING

The Offset Distance can be adjusted immediately from the Bottom Tracking Menu when the Bottom Tracking feature is turned "on". When the Bottom Track feature is already "on", follow this process to adjust the Offset Distance.

1

a. With Bottom Tracking "on", press the Menu button once to bring up the Quick Menu. The title on the Quick Menu will correspond to the view that the downrigger was currently displaying when the Menu button was selected.

b. From the Quick Menu, use the Down button to scroll to the item listed Adjust Tracking. Press the Right button to select it.

c. This opens the Bottom Tracking Menu, use the Up button and the Down button to scroll to the Offset Distance option. Use the Right button and the Left button to adjust the setting.

d. When satisfied with the selection, use the Exit button to close the menu.

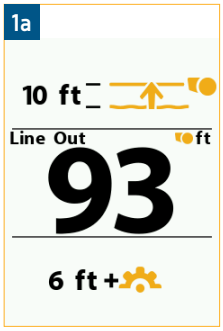



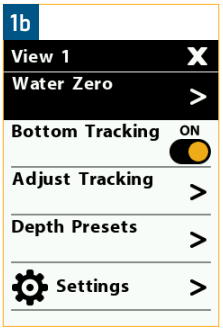

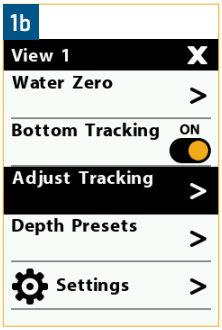

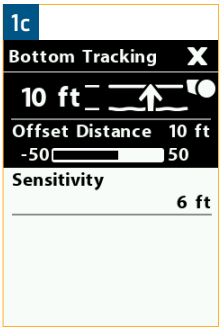

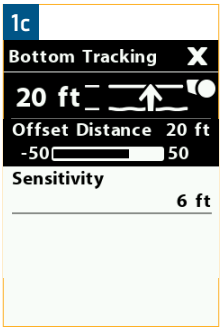

© 2021 | Johnson Outdoors Marine Electronics, Inc. | cannondownriggers.com

ADJUSTING SENSITIVITY FOR BOTTOM TRACKING

The Sensitivity can be adjusted immediately from the Bottom Tracking Menu when the Bottom Tracking feature is turned "on". The default sensitivity is 6ft. When the Bottom Track feature is already "on", follow this process to adjust the Sensitivity.

1

a. With Bottom Tracking "on", press the Menu button once to bring up the Quick Menu. The title on the Quick Menu will correspond to the view that the downrigger was currently displaying when the Menu button was selected.

b. From the Quick Menu, use the Down button to scroll to the item listed Adjust Tracking. Press the Right button to select it.

c. This opens the Bottom Tracking Menu, use the Up button and the Down button to scroll to the Sensitivity option. Use the Right button and the Left button to adjust the setting.

d. When satisfied with the selection, use the Exit button to close the menu.

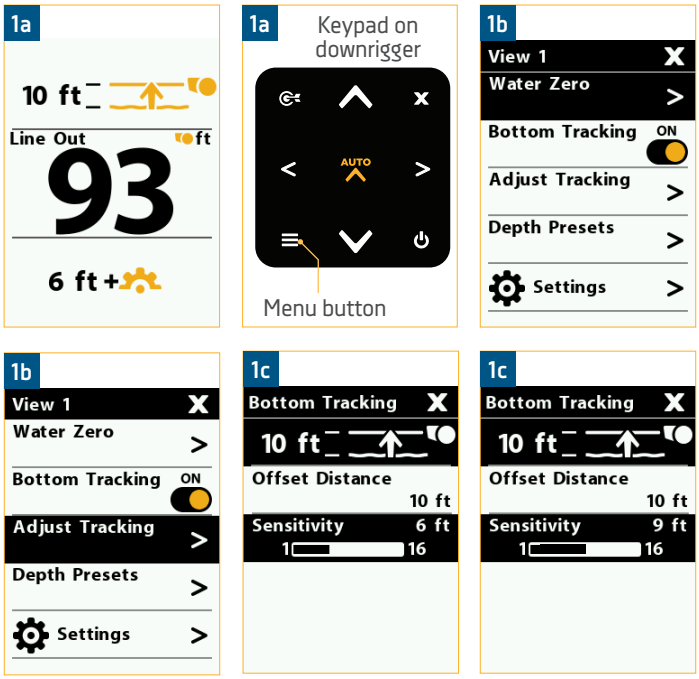

© 2021 | Johnson Outdoors Marine Electronics, Inc. | cannondownriggers.com

DEPTH CYCLING

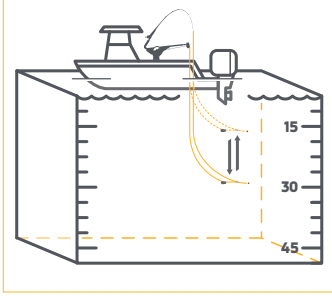

Depth Cycling is integrated into the downrigger in a feature called Cycle Mode. It controls the downrigger to automatically cycle up and down between two depths. This allows you to target a zone when fishing and keeps your bait moving as you troll. It works by setting a Cycle Depth, a Range, Pause Time and Up Speed and Down Speed. The Cycle Depth is the lowest or deepest depth that you want the weight to travel and the Range is the distance between the deepest depth at the bottom of the cycle and the top depth at the top of the cycle while the weight travels when the cycle is running. The Cycle Depth can be set anywhere from Auto to 370 feet and be adjusted in 10 foot increments and the Range can be set from 0 to 50 feet with 1 foot increments. The Depth Cycle of Auto will run the downrigger at the currently set depth and adjust all settings from the current state of the downrigger. Select the depth levels and time intervals, then stay in the strike zone. The Pause Time is the length of time that the weight stays at the top depth and the bottom depth and can be changed in 1 second increments from 5 to 60 seconds. The Up Speed and the Down Speed are the speed that the Spool spins while the weight is moving between cycles and can be set from speed 1 to 5. The speed is changed in intervals of 1.

DEPTH CYCLING

TURNING CYCLE MODE ON

1

a. With the downrigger "on", press the Menu button once to bring up the Quick Menu. The title on the Quick Menu will correspond to the View that the downrigger was currently displaying when the Menu button was selected. The items in the Quick Menu will vary depending on the features that the downrigger is running and what view the Color LCD is set to.

b. From the Quick Menu, use the Down button to scroll to the item listed Cycle Mode. There is a toggle switch located on the Cycle Mode Menu option. Press the Right button to toggle Cycle Mode "on".

1a



1a Keypad on downrigger

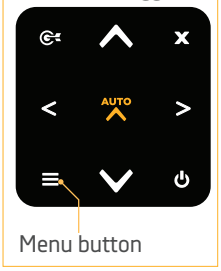

1b



1b



2

c. When Cycle Mode is toggled "on" the Cycle Mode Menu will open. Cycle Mode settings of Cycle Depth, Range, Pause Time, Up Speed and Down Speed will appear in the Cycle Mode Menu. Use the Up button and the Down button to scroll to the options in the list and use the Right button and the Left button to adjust the settings. Adjust the Cycle Mode settings as desired and then use the Up button or the Down button to scroll to the Start option. Use the Right button to select it.

d. When Cycle Mode is started, the downrigger Color LCD will return to the View it was previously displaying and will display Cycle Mode info based on the settings selected.



TURNING CYCLE MODE OFF

1

a. With the downrigger "on", press the Menu button once to bring up the Quick Menu. The downrigger can scroll through several Views. The title on the Quick Menu will correspond to the view that the downrigger was currently displaying when the Menu button was selected.

b. From the Quick Menu, use the Down button to scroll to the item listed Cycle Mode. There is a toggle switch located on the Cycle Mode Menu option. Press the Right button to toggle Cycle Mode "off".

c. Use the Exit button to close the Quick Menu and return to the View that was previously displayed.

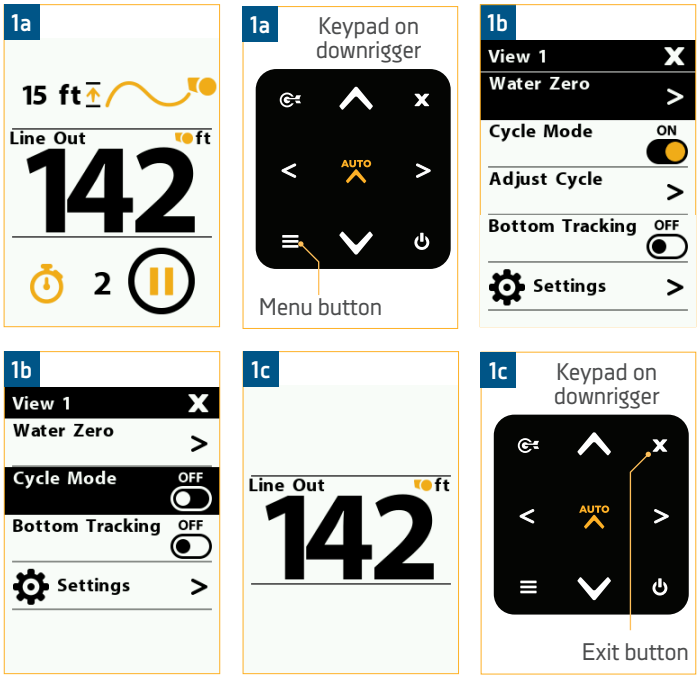

© 2021 | Johnson Outdoors Marine Electronics, Inc. | cannondownriggers.com

ADJUSTING CYCLE DEPTH FOR CYCLE MODE

1

a. With Cycle Mode "on", press the Menu button once to bring up the Quick Menu. The title on the Quick Menu will correspond to the View that the downrigger was currently displaying when the Menu button was selected. The items in the Quick Menu will vary depending on the features that the downrigger is running and what view the Color LCD is set to.

b. From the Quick Menu, use the Down button to scroll to the item listed Adjust Cycle. Use the Right button to select it. This opens the Cycle Mode Menu.

c. From the Cycle Mode Menu, use the Up button and the Down button to scroll to Cycle Depth and use the Right button and the Left button to adjust the setting.

d. When the Cycle Depth is as desired, use the Exit button to close the menu and the downrigger will adjust the new settings.

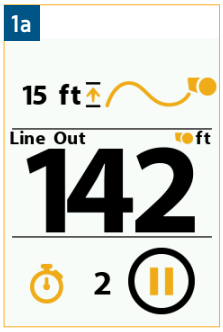



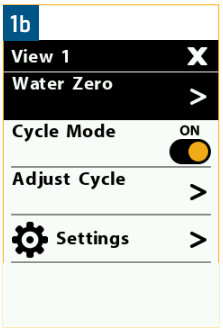

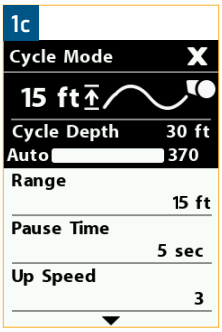

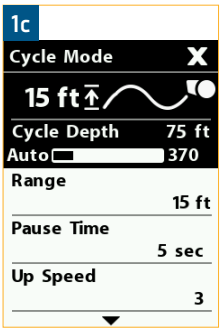

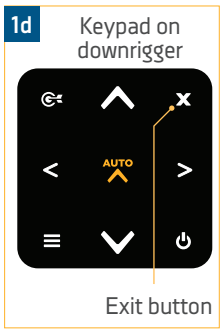

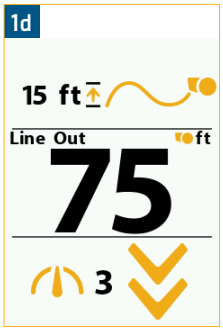

ADJUSTING RANGE FOR CYCLE MODE

1

a. With Cycle Mode "on", press the Menu button once to bring up the Quick Menu. The title on the Quick Menu will correspond to the View that the downrigger was currently displaying when the Menu button was selected. The items in the Quick Menu will vary depending on the features that the downrigger is running and what View the Color LCD is set to.

b. From the Quick Menu, use the Down button to scroll to the item listed Adjust Cycle. Use the Right button to select it. This opens the Cycle Mode Menu.

c. From the Cycle Mode Menu, use the Up button and the Down button to scroll to Range. Use the Right button and the Left button to adjust the Range.

d. When the Range is as desired, use the Exit button to close the menu and the downrigger will adjust to the new settings.

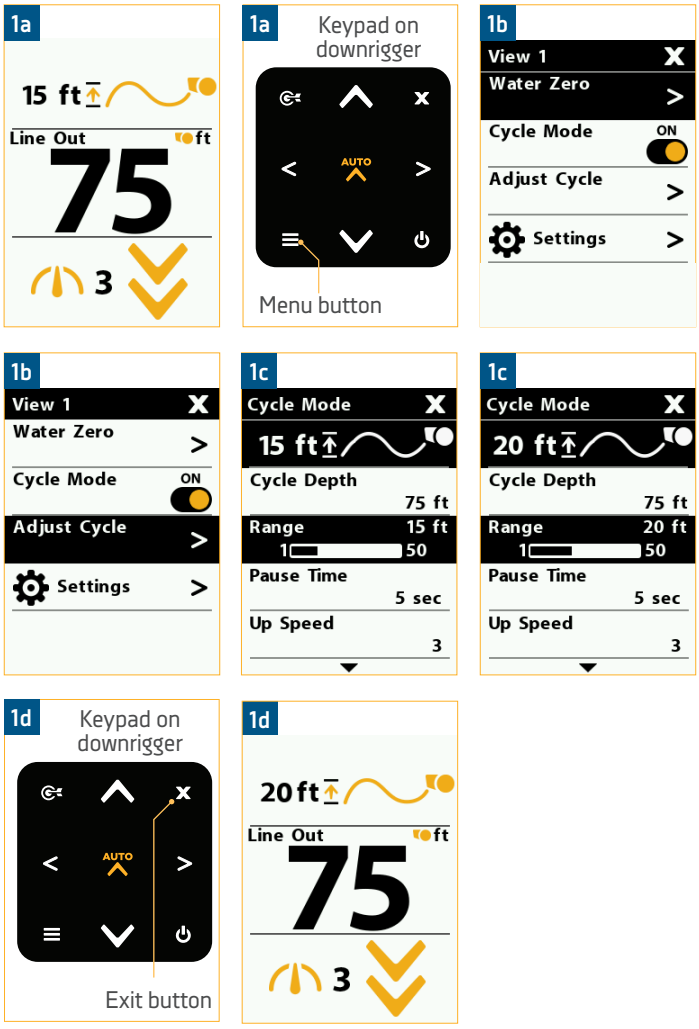

© 2021 | Johnson Outdoors Marine Electronics, Inc. | cannondownriggers.com

ADJUSTING PAUSE TIME FOR CYCLE MODE

1

a. With Cycle Mode "on", press the Menu button once to bring up the Quick Menu. The title on the Quick Menu will correspond to the View that the downrigger was currently displaying when the Menu button was selected. The items in the Quick Menu will vary depending on the features that the downrigger is running and what View the Color LCD is set to.

b. From the Quick Menu, use the Down button to scroll to the item listed Adjust Cycle. Use the Right button to select it. This opens the Cycle Mode Menu.

c. From the Cycle Mode Menu, use the Up button and the Down button to scroll to Pause Time option. Use the Right button and the Left button to adjust the Pause Time as desired.

d. When the Pause Time is set, use the Exit button to close the menu and the downrigger will adjust to the new settings.

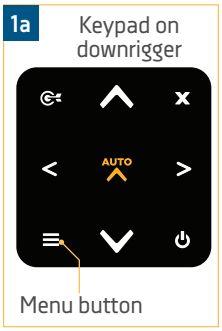

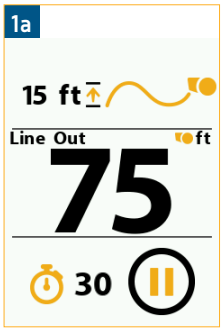

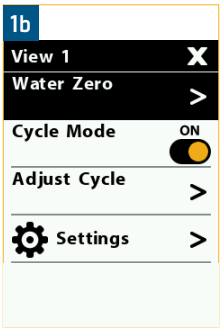

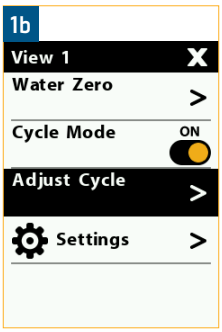

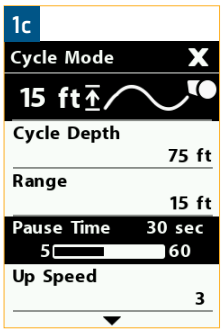

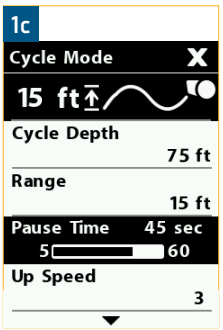

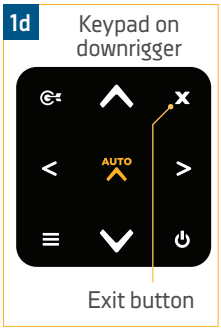

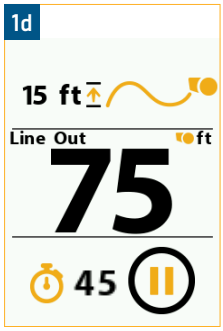

ADJUSTING UP SPEED FOR CYCLE MODE

1

a. With Cycle Mode "on", press the Menu button once to bring up the Quick Menu. The title on the Quick Menu will correspond to the View that the downrigger was currently displaying when the Menu button was selected. The items in the Quick Menu will vary depending on the features that the downrigger is running and what View the Color LCD is set to.

b. From the Quick Menu, use the Down button to scroll to the item listed Adjust Cycle. Use the Right button to select it. This opens the Cycle Mode Menu.

c. From the Cycle Mode Menu, use the Up button and the Down button to scroll to the Up Speed option. Use the Right button and the Left button to adjust the Up Speed as desired.

d. When the Up Speed is set, use the Exit button to close the menu and the downrigger will adjust to the new settings.

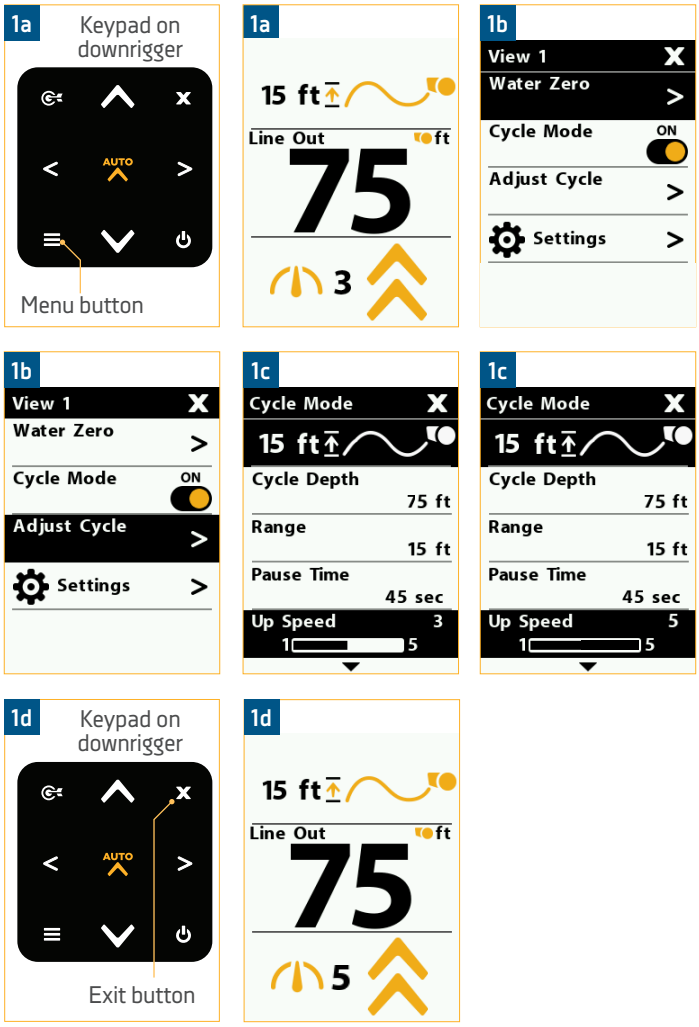

© 2021 | Johnson Outdoors Marine Electronics, Inc. | cannondownriggers.com

ADJUSTING DOWN SPEED FOR CYCLE MODE

1

a. With Cycle Mode "on", press the Menu button once to bring up the Quick Menu. The title on the Quick Menu will correspond to the View that the downrigger was currently displaying when the Menu button was selected. The items in the Quick Menu will vary depending on the features that the downrigger is running and what View the Color LCD is set to.

b. From the Quick Menu, use the Down button to scroll to the item listed Adjust Cycle. Use the Right button to select it. This opens the Cycle Mode Menu.

c. From the Cycle Mode Menu, use the Up button and the Down button to scroll to the Down Speed option. Use the Right button and the Left button to adjust the Down Speed as desired.

d. When the Down Speed is set, use the Exit button to close the menu and the downrigger will adjust to the new settings.

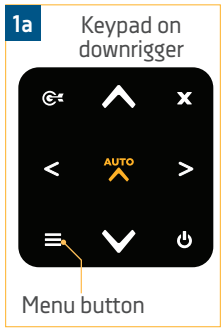

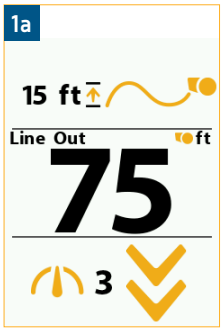

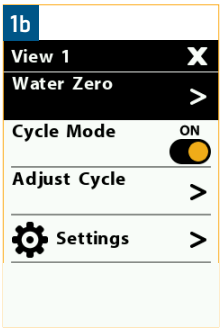







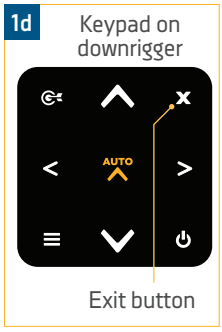

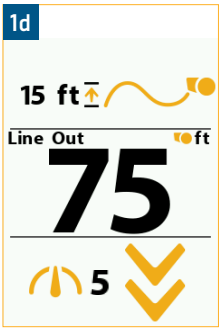

POSITIVE ION CONTROL

POSITIVE ION CONTROL

Your boat has a natural electrical charge around the hull when it sits in the water. If a boat is properly grounded and has a proper zinc anode, that charge should be slightly positive when measured from the motor or lead ground to the downrigger line. Because of the composite construction of the Optimum and Optimum TS downrigger frame, the downrigger is insulated from your boat's hull charge. The downrigger line will only conduct a charge when it is stainless steel and will not hold a charge when the line is mono-filament or braided. When a stainless steel downrigger line is lowered into the water, the natural ionization between the line and the boat creates a positive charge of 0.7 to 0.9 volts in saltwater and 0.3 to 0.6 volts in fresh water. This natural voltage is dependent upon salinity and mineral content of the water and the actual voltage may vary. It will also only work correctly when the boat is properly grounded.

POSITIVE ION CONTROL

The practice of setting up and maintaining a slight positive charge on fishing gear has been used by commercial fishermen for many years and has enabled some fisherman to increase yield when used along with other good fishing and boating practices. Positive Ion Control (PIC) is the use of electricity to control the charge on the downrigger line and its fluctuation so that it is always maintained at a specified set voltage. Cannon's electric downriggers offer fishermen a big advantage in being able to stabilize and control the positive charge around their boat with the PIC system.

NOTICE: The Positive Ion Control system will only work with stainless steel Line and will not work when the Line is mono-filament or braided.

The Positive Ion Control system applies a charge between 0.2 to 1.2 volts on the downrigger line at all times. This charge can be changed in increments of 0.1 V. The default setting is 0.6V. The PIC system applies the voltage to the downrigger line and not the fishing line from the fishing rod. The two lines are tied together while fishing with a downrigger by a Line Release. Positive Ion Control is very effective when trolling. A zone of attraction will be created by the downrigger line with PIC applied to attract fish. Placing the lure in the zone of attraction will allow the operator to use PIC to their advantage when fishing. The distance between the end of the fishing line where the lure is placed and the spot on the fishing line where the Line Release is secured is called the Drop Back. It is best to use a short Drop Back between the downrigger Line Release and the lure so that the electrical charge from the PIC circuit is close to the lure. Drop Backs of 10 to 20 ft. are typical. A Drop Back of 50 to 100 ft. will entirely negate the effects of the PIC circuit. Fishing depths greater than 125 ft. may require a slightly higher PIC voltage. If you return to shallow water fishing remember to turn the PIC voltage down again. The correct PIC setting for best fishing advantage varies, depending on fish type and location. To fully benefit from PIC technology, it is important that you experiment with the PIC setting to find the proper voltage for the game fish in the area.

MEASURING THE ELECTRICAL POTENTIAL OF YOUR BOAT

A voltmeter with a scale of zero to one volts will measure the electrical potential of your boat.

1

a. Place the ground lead of the voltmeter on the motor or the battery ground.

b. Place the positive lead of the voltmeter on the stainless steel downrigger line while it is in the water. The downrigger must be unplugged.

c. The voltage measured on the volt meter is your boat's natural electrolysis voltage.

© 2021 | Johnson Outdoors Marine Electronics, Inc. | cannondownriggers.com

SETTING THE PIC VALUE FOR THE DOWNRIGGER LINE

1

a. Make sure the downrigger is turned "on", by pressing the Power button on the downrigger keypad.

b. Press the Menu button twice to bring up the Settings Menu on the Color LCD.

c. From the Settings Menu, use the Down button to scroll to the item listed Downrigger. Press the Right button to open the Downrigger Menu.

d. From the Downrigger Menu, use the Up button and the Down button to scroll to the option listed PIC Value. Use the Right button and the Left button to adjust the PIC Value setting.

e. When the PIC Value is set, use the Exit button to close the menu and the downrigger will adjust to the new settings.

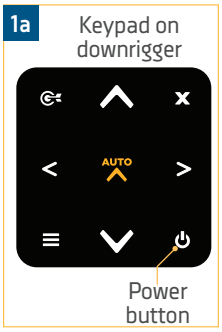

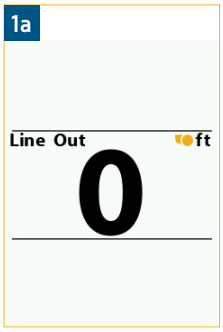

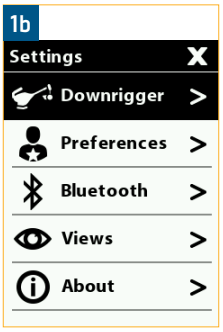

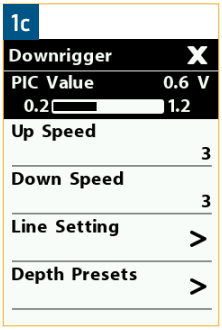

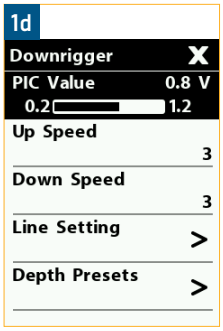

MEASURING THE PIC VOLTAGE ON YOUR BOAT

A voltmeter with a scale of zero to one volt will measure the PIC voltage on your downrigger line.

1

a. Place the ground lead of the voltmeter on the motor or the battery ground.

b. Place the positive lead of the voltmeter on the stainless steel downrigger line while it is in the water.

c. Power the downrigger and turn the downrigger "on".

d. Set the PIC voltage as desired. The voltage measured on the voltmeter is your PIC voltage.

NOTICE: Volt Meter accuracy and distance of line (stainless steel) to the point the voltage is measured at might result in a reading that varies slightly from the set PIC voltage.

SHORT STOP / SOFT STOP

SHORT STOP

Short Stop automatically stops the weight at the water's surface, preventing the lift motor from raising it into the Pulley at the end of the Boom. When the downrigger line is in the water, a small electrical current flows between the line and grounded metal boat components in the water. When the line clears the water, the current flow stops. The Short Stop system senses this interruption and turns off the motor. The Snap Assembly with Insulator is used to break the Line contact to the water while the Weight is still in the water. Stopping the weight at water level eliminates the Line strain caused by a bouncing Weight or a Weight hitting the Boom End, and it also keeps the Weight from swinging into the boat hull. This feature requires the boat to be properly grounded.



SHORT STOP

NOTICE: Short Stop will only work with stainless steel Line and will not work when the Line is mono-filament or braided.

SOFT STOP

Eliminates sudden stops at ascent and decent end points when the downrigger weight is in motion. Eliminates sudden stops by gradually slowing the ascent and descent speed of the weight as it reaches its end point. This helps to eliminate strain and helps control smoother bait presentation when trolling.



SOFT STOP

© 2021 | Johnson Outdoors Marine Electronics, Inc. | cannondownriggers.com

BLOWBACK CALCULATIONS

BLOWBACK

Blowback is created by the resistance of the water to the downrigger Weight and line as you pull it through the water behind your boat. When the speed of the boat is increased the horizontal distance behind the boat also increases. This causes the weight to move shallower, so more line needs to be released from the spool to get back to your target depth.

The following charts provide you with approximate blowback information for three sizes of Cannon downrigger Weights pulled at three different speeds with no lures attached and with no current in the water. Water current, water current drag, water salinity and the use of non-Cannon products will affect your actual trolling depth and blowback.

As an example, the first chart shows that if you are trolling at 4 MPH with an 8 pound weight and you have 100 feet of line in the water with no current; the down rigger Weight is actually at a depth of about 80 feet.

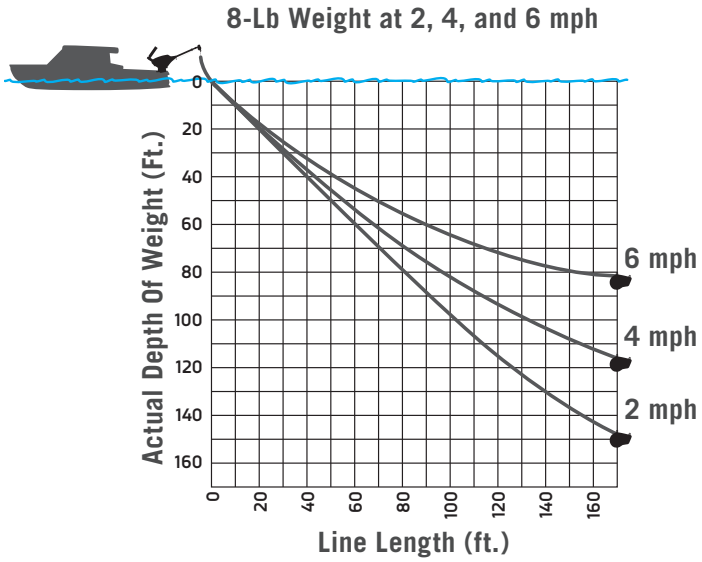

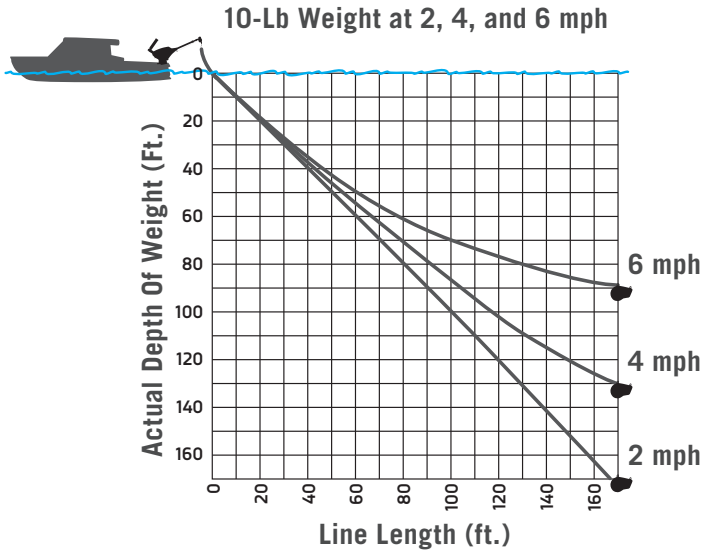

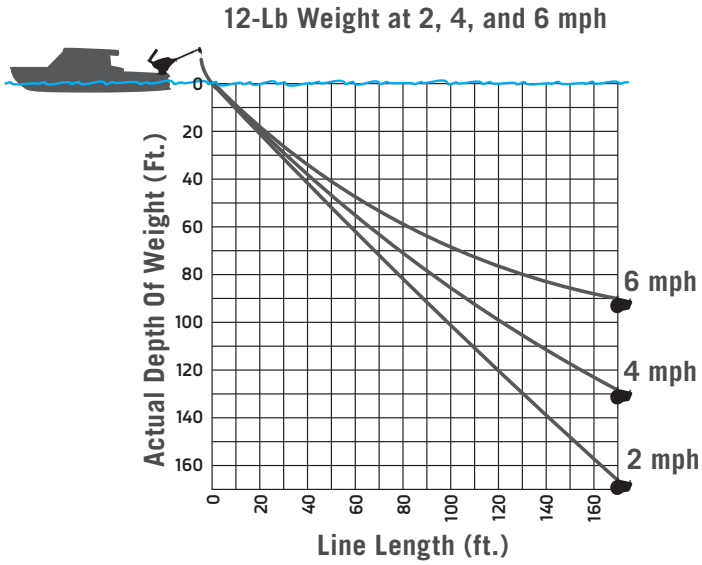

NOTICE: These tables are approximate and may be affected by water current, water current drag, water salinity, trolling depth and the use of non-cannon products among other things.

VIEWS & VIEW MENU

VIEWS

The downrigger Color LCD can give the user a variety of data based on the View that is selected. There are 8 standard Views and 2 additional Sonar Views. Views can be toggled "on" and "off". Some of the content available is specific to the equipment that the downrigger is connected to within the Network, and may include information provided by connections to the FishHawk X4D System, additional downriggers, a device or Cannon Transducer. These Views can be accessed on the Color LCD using the Right (>) button and the Left (<) button from the downrigger keypad when all menus are closed. Many of the data fields in these Views can be adjusted in the Quick Menu based on user preference and options available based on the data provided by connected equipment. The editable data fields in the Quick Menu will correlate to the View that the Color LCD is showing to allow for user customization for individual fishing applications. Sonar View and Sonar Zoom View are only available if the downrigger is connected to a transducer.

View 1

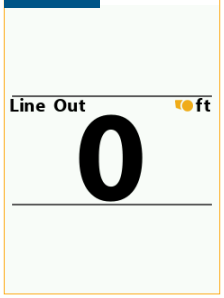

Line Out

View 2

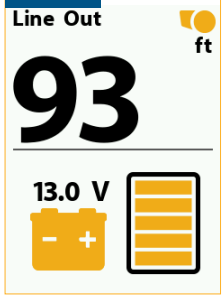

Line Out ➤
Downrigger Mode ➤

View 3

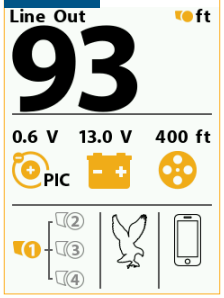

Line Out ➤
PIC/Voltage/Reel ➤
Network Status ➤

View 4

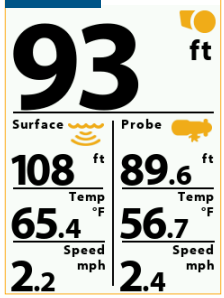

Line Out
Surface Depth/ Surface Temp/ Surface Speed,
Probe Depth/Probe Temp/Probe Speed

View 5

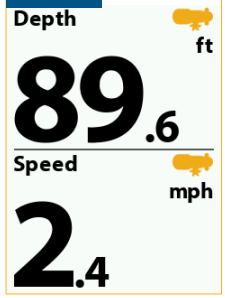

Probe Depth ➤
Probe Speed ➤

View 6

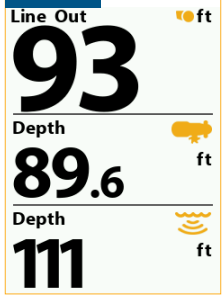

Line Out ➤
Probe Depth ➤
Surface Depth ➤

View 7

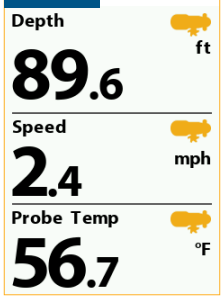

Probe Depth ➤
Probe Speed ➤
Probe Temp ➤

View 8

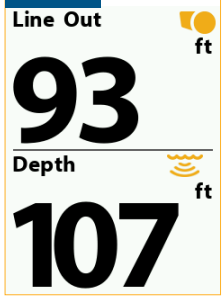

Line Out ➤
Surface Depth ➤

Sonar View

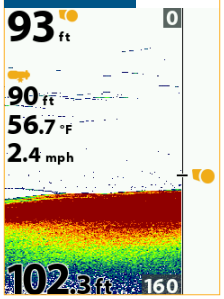

Line Out
Probe Depth/ Probe Temp/ Probe Speed
Surface Depth
Sonar

Sonar Zoom View

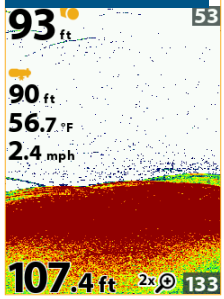

Line Out
Probe Depth/ Probe Temp/ Probe Speed
Surface Depth
Sonar Zoom

➤ Designates editable data field.

© 2021 | Johnson Outdoors Marine Electronics, Inc. | cannondownriggers.com

Each View provides a specific set of information on the Color LCD. Some Views have editable data fields that can be customized to enhance user experience. Use the Quick Menu by pressing the Menu button once from any View to bring up the View Quick Menu. Options to change the information in the data field are available in any applicable Quick Menu. All editable data fields can be changed to one of the following options: Line Out, Downrigger Mode, Network Status, PIC/Voltage/Reel, Surface Depth, Probe Depth, Probe Temp, Probe Speed, Surface Temp, Surface Speed.

NOTICE: Water Zero is available on every Quick Menu for all data views. Cycle Mode and Bottom Tracking options are available on every Quick Menu for all data views except Sonar Zoom View.

VIEW 1 ➤

VIEW 1 - Line Out - The data fields in this View are not editable and this View cannot be turned "off".

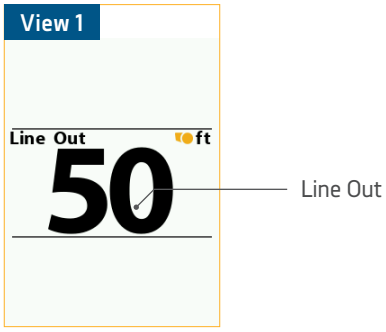



VIEW 2 ➤

VIEW 2 - ➤Line Out, ➤Downrigger Mode

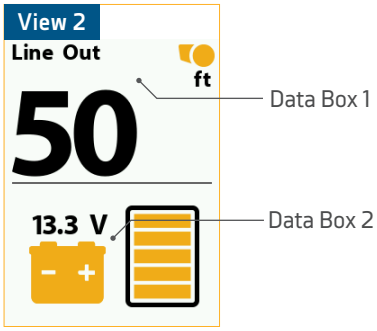

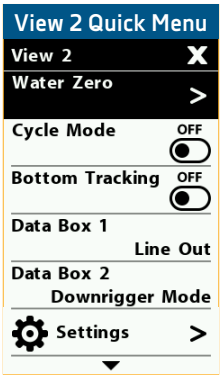

VIEW 3 ➤

VIEW 3 - ➤Line Out, ➤PIC/Voltage/Reel, ➤Network Status

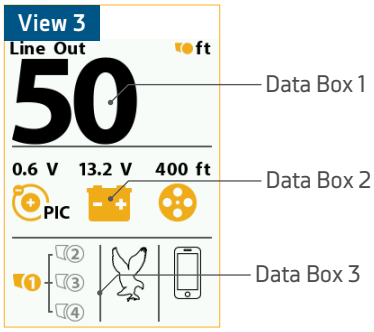

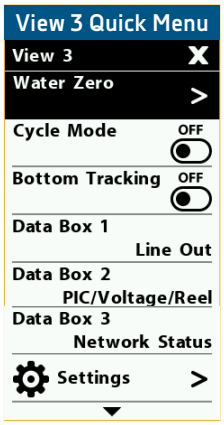

VIEW 4 ➤

VIEW 2 - Line Out, Surface Depth/Surface Temp/Surface Speed, Probe Depth/Probe Temp/Probe Speed - Data fields are not editable.

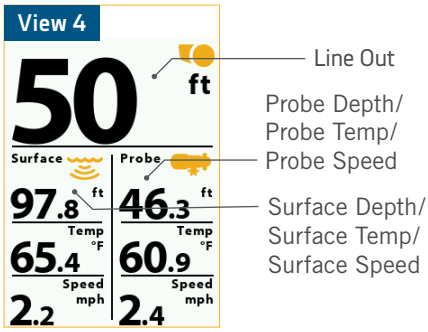

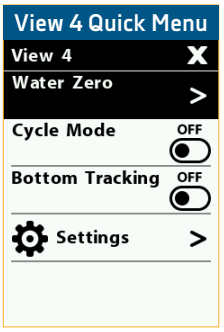

➤ Designates editable data field.

VIEWS & VIEW MENU

VIEW 5 ➤

VIEW 5 - ➤Probe Depth, ➤Probe Speed

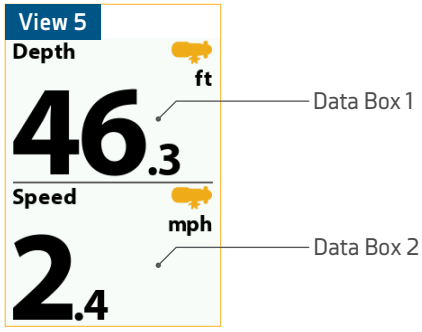

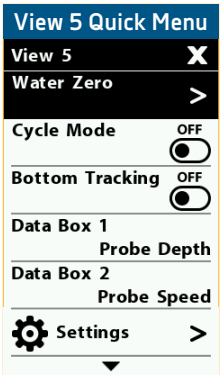

VIEW 6 ➤

VIEW 6 - ➤Line Out, ➤Probe Depth, ➤Surface Depth

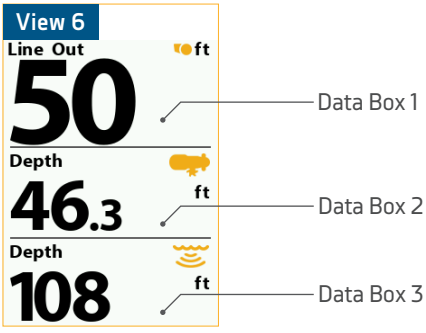

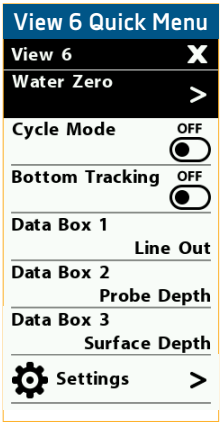

VIEW 7 ➤

VIEW 7 - ➤Probe Depth, ➤Probe Speed, ➤Probe Temp

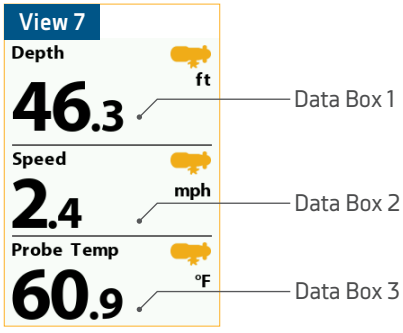

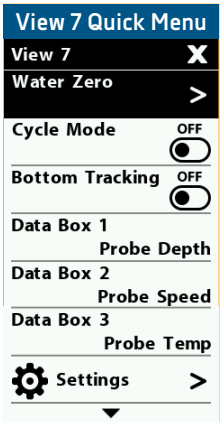

VIEW 8 ➤

VIEW 8 - ➤Line Out, ➤Surface Depth

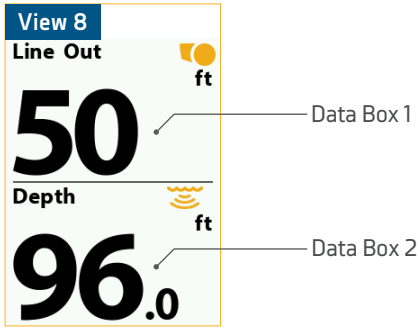

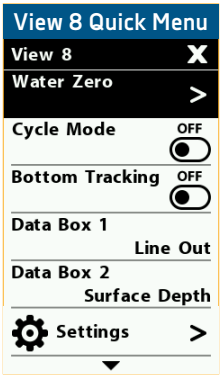

➤ Designates editable data field.

© 2021 | Johnson Outdoors Marine Electronics, Inc. | cannondownriggers.com

SONAR VIEW

SONAR VIEW - Line Out, Probe Depth/Probe Temp/Probe Speed, Surface Depth, Sonar - Data fields in this View are not editable.

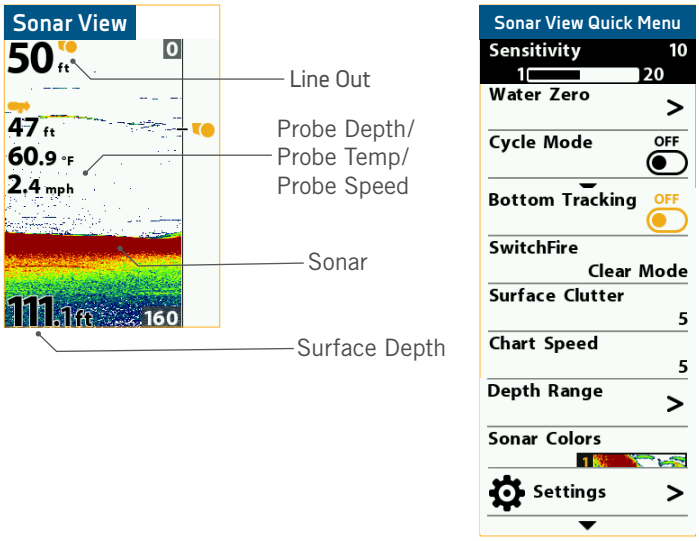

SENSITIVITY - Sets the Sensitivity from 1 to 20. Use the Right button or the Left button to edit the sliding scale. The default is set to 10.

WATER ZERO - View the Waterline Zero section of this manual.

CYCLE MODE - View the Depth Cycling section of this manual.

BOTTOM TRACKING - View the Bottom Tracking section of this manual.

SWITCHFIRE - Get complete command of how your sonar returns appear with two unique display modes that you can adjust to your fishing conditions on the fly. Edit how your sonar return appear on the Color LCD with Clear Mode or Max Mode. Add or remove detail; account for water depth, temperature and turbulence; even experiment with lure presentations—all at the push of a button. SwitchFire adds a whole new dimension to 2D fish-finding. Use the Right button or the Left button to switch between modes. The default is Clear Mode.

SURFACE CLUTTER - Adjust the sensitivity of the Surface Clutter in the Sonar. Adjusts between 1 and 10 using the Right button or the Left button to select on the sliding scale. The higher the number, the more detailed the Surface Clutter. The default is 5.

CHART SPEED - Adjust the speed the chart between 1 and 10 using the Right button or the Left button to select a speed on the sliding scale. The higher the number, the faster the speed. The default is 5.

DEPTH RANGE - Adjust the depth shown on the Sonar View. Use the Right button to select Depth Range to open the Depth Range Menu. Once in the menu, Use the Up button and the Down button to scroll to an Upper Range or a Lower Range. The Upper Range can be set on a sliding scale from 0 to 590 feet, with a default of 1 ft. The Lower Range can be set on a sliding scale from 0 to 600 feet. The Lower Range default is Auto. The Upper Range is nearer Water Zero. Each can be set on a sliding scale using the Right button and the Left button.

SONAR COLORS - Choose between 8 different color combinations for displaying sonar information. Use the Right button or the Left button to switch between the options. The default is set to 1.

SETTINGS - View the Settings Menu section of this manual.

© 2021 | Johnson Outdoors Marine Electronics, Inc. | cannondownriggers.com

SONAR ZOOM VIEW

SONAR ZOOM VIEW - Line Out, Probe Depth/Probe Temp/Probe Speed, Surface Depth, Sonar Zoom - Data fields in this view are not editable.

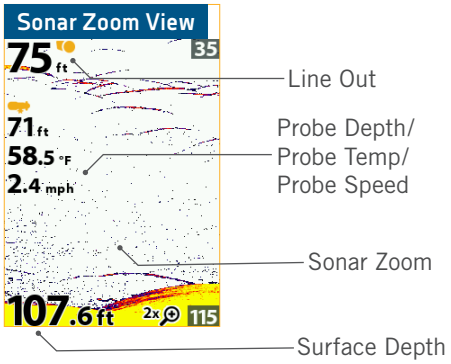

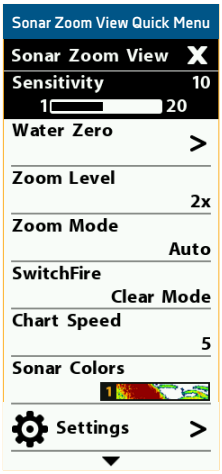

SENSITIVITY - Sets the Sensitivity from 1 to 20. Use the Right button or the Left button to edit the sliding scale. Default is 10.

WATER ZERO - View the Waterline Zero section of this manual.

ZOOM LEVEL - Change the level of Zoom from 2x, 4x, 6x or 8x. Use the Right button or the Left button to switch between the options. The default is 2x.

ZOOM MODE - Change the Mode to Auto, Manual or Bottom. Use the Right button or the Left button to switch between the options. The default is Auto.

SWITCHFIRE -Get complete command of how your sonar returns appear with two unique display modes that you can adjust to your fishing conditions on the fly. Edit how your sonar return appear on the Color LCD with Clear Mode or Max Mode. Add or remove detail; account for water depth, temperature and turbulence; even experiment with lure presentations—all at the push of a button. SwitchFire adds a whole new dimension to 2D fish-finding. Use the Right button or the Left button to switch between modes. The default is Clear Mode.

CHART SPEED - Adjust the speed the chart between 1 and 10 using the Right button or the Left button to select a speed on the sliding scale. The higher the number, the faster the speed. The default is 5.

SONAR COLORS - Choose between 8 different color combinations for displaying sonar information. Use the Right button or the Left button to switch between the options.

SETTINGS - View the Settings section of this manual.

© 2021 | Johnson Outdoors Marine Electronics, Inc. | cannondownriggers.com

SETTINGS MENU

SETTINGS MENU

Navigate to the Settings Menu by double pressing the Menu ≡ button from any downrigger view.

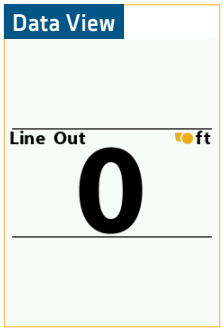

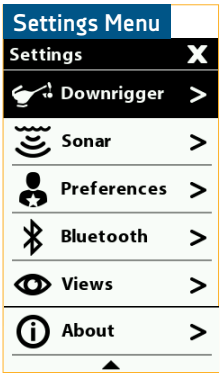

NOTICE: Certain menu options will only be available when the downrigger is connected to other downriggers or networked with additional equipment. The Sonar Menu option is only available to sonar enabled downriggers that are connected to a Cannon Transducer.

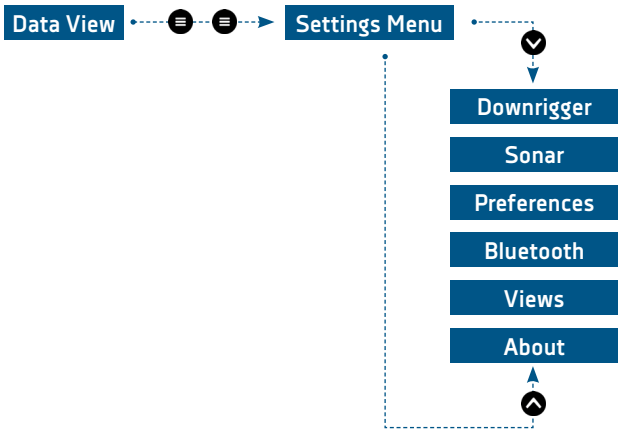

DOWNRIGGER - Use this menu to adjust the PIC Value, Up Speed, Down Speed, Line Settings and Depth Presets.

SONAR - Navigate to Sonar Depth Offset, Water Type, Noise Filter and Depth Lines.

PREFERENCES - Use this Menu to adjust preferences such as Language. Battery Alarm, Temperature, Depth and Distance, Speed for distance traveled, Restore Defaults and Demo Mode.

BLUETOOTH - Use this menu to set up and maintain the downrigger network including viewing the Device List, Pairing a Downrigger, Pairing a Phone or Fish Hawk and Restoring the Network.

VIEWS - A menu used to toggle views on the downrigger Color LCD "on" or "off".

ABOUT - A menu that lists helpful information specific to the downrigger.

SETTINGS MENU

DOWNRIGGER MENU

Navigate to the Downrigger Menu by double pressing the Menu button from any downrigger View to first open the Settings Menu. Use the Up button and the Down button to find Downrigger in the Settings Menu. Use the Right button to select Downrigger and open the Downrigger Menu.

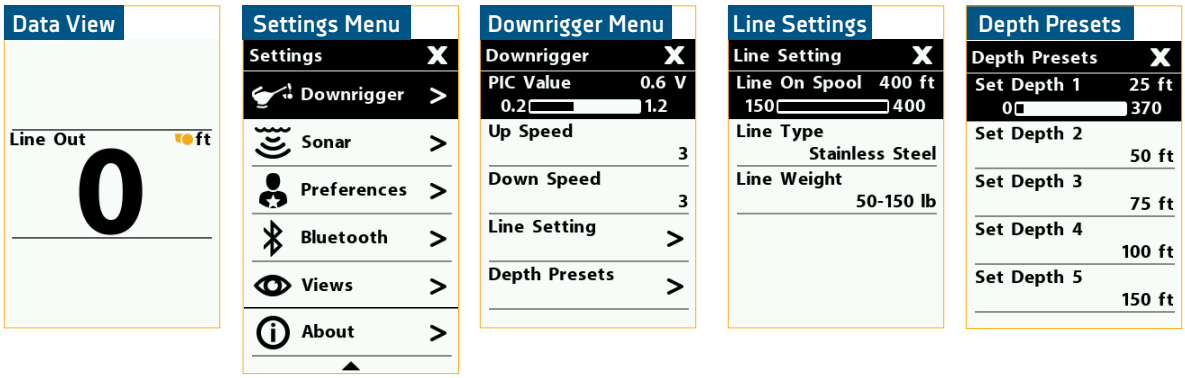

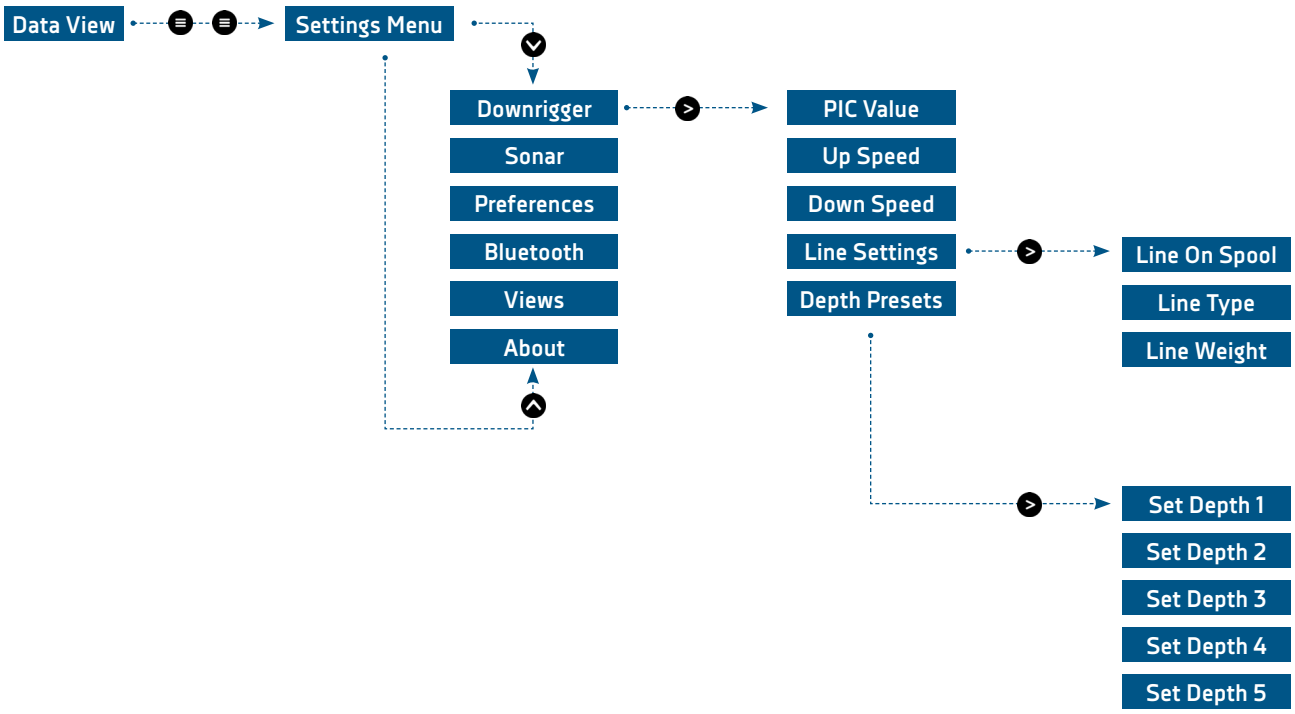

PIC VALUE - Sliding scale used to set the positive charge on a stainless steel line. Read the Positive Ion Control section of this document for more information. The default is 0.6V.

UP SPEED - Set the speed at which the weight is retrieved or the line is moved up. Set between 1 and 5 using the Right button or the Left button on a sliding scale. The default is 3.

DOWN SPEED - Set the speed that the Spool rotates to send the line out and the weight down. Set between 1 and 5 using the Right button or the Left button on a sliding scale. The default is 3.

© 2021 | Johnson Outdoors Marine Electronics, Inc. | cannondownriggers.com

LINE SETTING - This menu option contains a sub menu to edit Line on Spool, Line Type and Line Weight.

LINE ON SPOOL - Program the downrigger with the amount of Line on the Spool. The Spool comes installed with 400 feet of stainless steel line. The Line on the Spool is set to the default of 400 feet. The range can be adjusted between the minimum of 150 feet to a maximum of 400 feet. The Line on Spool can be adjusted on 50 foot increments on a sliding scale that can be adjusted using the Right button or the Left button.

LINE TYPE - The default Line Type is Stainless Steel, but can be set to either Braided, Stainless Steel or Mono. Use the Right button or the Left button to scroll between the options.

LINE WEIGHT - The default Line Weight is 50-150lbs, but can be set to either 50-150lbs, 150-200lbs or 200+lbs. Use the Right button or the Left button to scroll between the options.

DEPTH PRESETS - Use this menu to program Depth Presets. The default is 25 ft for depth 1, 50 feet for depth 2, 75 feet for depth 3, 100 feet for depth 4, 150 feet for depth 5. Use the Right button and Left button to change the presets on a sliding scale. Read the Preset Depth section of this document to learn more about Preset Depths.

SONAR MENU

Navigate to the Sonar Menu by double pressing the Menu button from any downrigger View to first open the Settings Menu. Use the Up button and the Down button to find Sonar in the Settings Menu. Use the Right button to select Sonar and open the Sonar Menu.

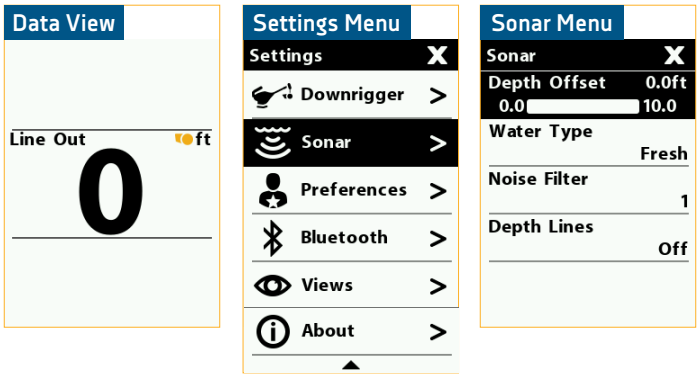

NOTICE: The Sonar Menu is only available when the downrigger is Sonar enabled.

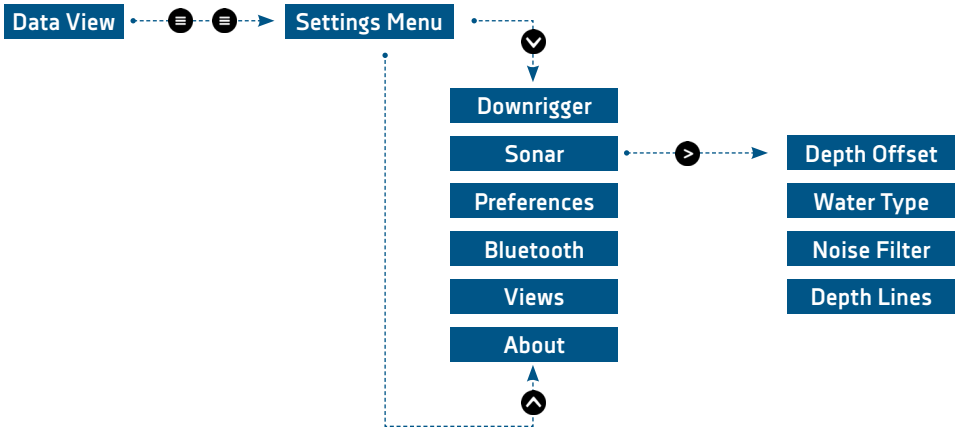

SETTINGS MENU

DEPTH OFFSET - Used to set the difference between where the transducer is mounted and the water line and is transducer specific based on its mounting location. Can be set in increments of 0.1 ft on a scale from 0.0 to 10.0 feet. Adjusted using the Right > button or the Left < buttons on a sliding scale. The default is 0.0 feet.

WATER TYPE - The default water type on the downrigger is fresh. Use the Right > button or the Left < button to scroll between the options of fresh, salt (shallow) or salt (deep).

NOISE FILTER - The Noise filter can be adjusted from either "off" or "on" in a range from 1 to 5. The default setting is one and can be adjusted on a sliding scale using the Right > button or the Left < button.

DEPTH LINES - Set the depth lines on the Sonar views either "on" or "off". The default is "off". Use the Right > button or the Left < button to scroll between the options.

PREFERENCES MENU

Navigate to the Preferences Menu by double pressing the Menu ≡ button from any downrigger View to first open the Settings Menu. Use the Up ^ button and the Down v button to find Preferences in the Settings Menu. Use the Right > button to select Preferences and open the Preferences Menu.

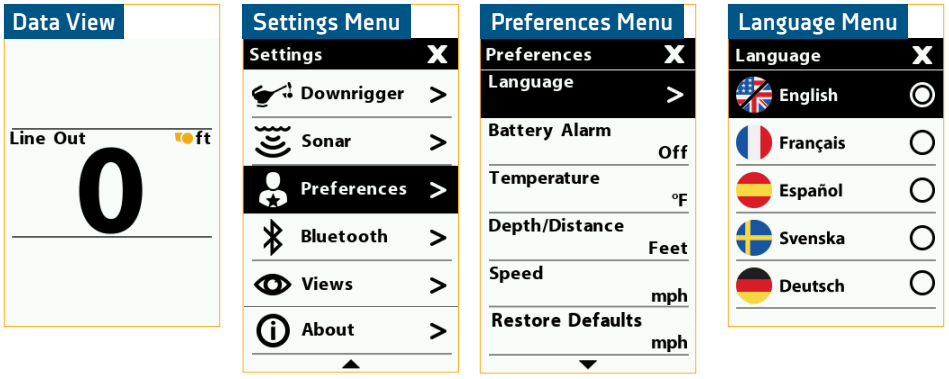

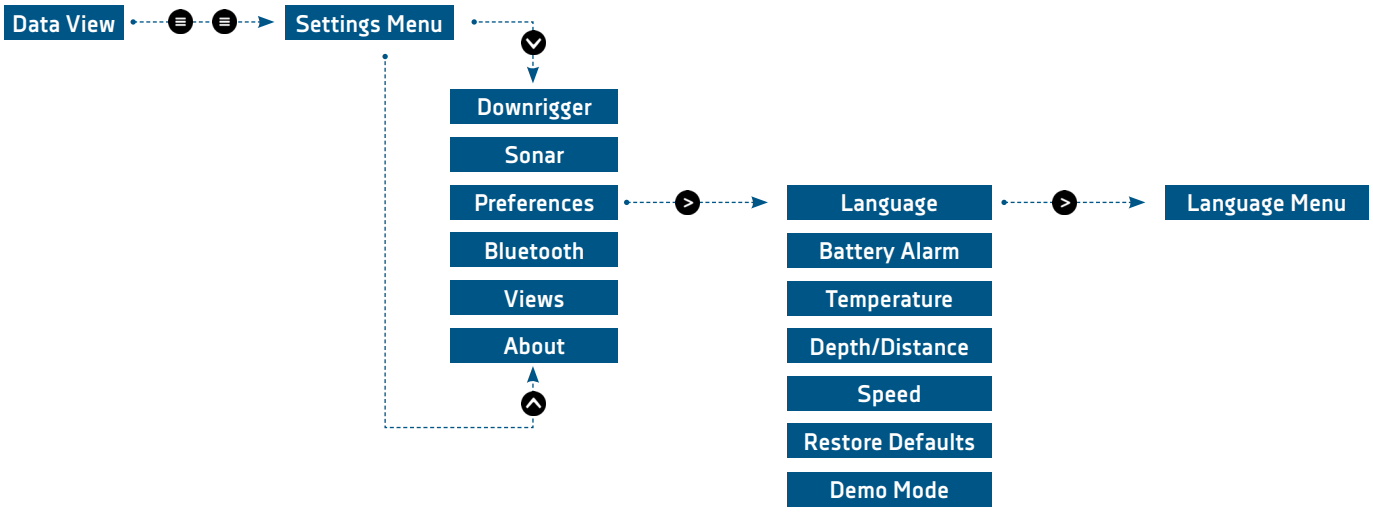

© 2021 | Johnson Outdoors Marine Electronics, Inc. | cannondownriggers.com

LANGUAGE - Choose between 1 of 22 languages. The default language is English. Use the Right button to confirm the language and make sure that the radio button to the right of the language is selected.

BATTERY ALARM - Shows an alarm when the battery drops below a certain voltage. The default is set to off, but can be adjusted between 9.0V and 13.5V. Use the Right button or the Left button to edit the sliding scale.

TEMPERATURE - Sets the temperature readings to Fahrenheit or Celsius. Use the Right button or the Left button to scroll between the options. The default is set to Fahrenheit.

DEPTH/DISTANCE - Sets the Distance and Depth reading measurements in units of Feet or Meters. Use the Right button or the Left button to scroll between the options. The default is set to Feet.

SPEED - Sets the Speed measurements in units of mph (miles per hour), kph (kilometers per hour), or kts (knots). Use the Right button or the Left button to scroll between the options. The default is set to mph.

RESTORE DEFAULTS - This restores all default settings on the downrigger. When restoring defaults, the downrigger will cycle power and reboot. The first time that the downrigger is powered back on after the defaults have been restored, the downrigger will bring up the Setup Guide. Use the Right button to Select and then use the Right button again to confirm. Read more about the Setup Guide in the Setup Guide section of this document.

DEMO MODE - Puts the downrigger into Demo Mode so that you can experience and practice operating the downrigger before using it in real time. The default for Demo Mode is "off". When turning Demo Mode "on" or "off", the downrigger will reboot to switch. It will not give a confirmation message when the option is switched "on" or "off". Use the Right button or the Left button to switch between the options.

BLUETOOTH MENU

Navigate to the Bluetooth Menu by double pressing the Menu button from any downrigger View to first open the Settings Menu. Use the Up button and the Down button to find Bluetooth in the Settings Menu. Use the Right button to select Bluetooth and open the Bluetooth Menu. To learn more about the options in this menu, review the "Connecting the Downrigger" section of this document.

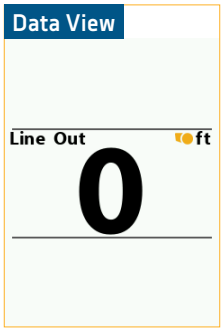

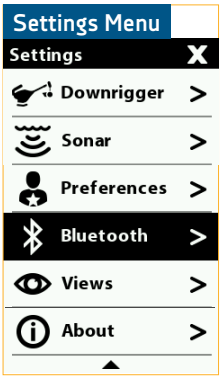

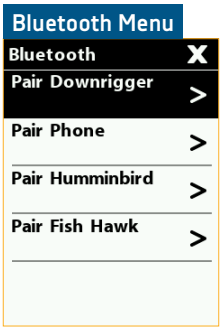

SETTINGS MENU

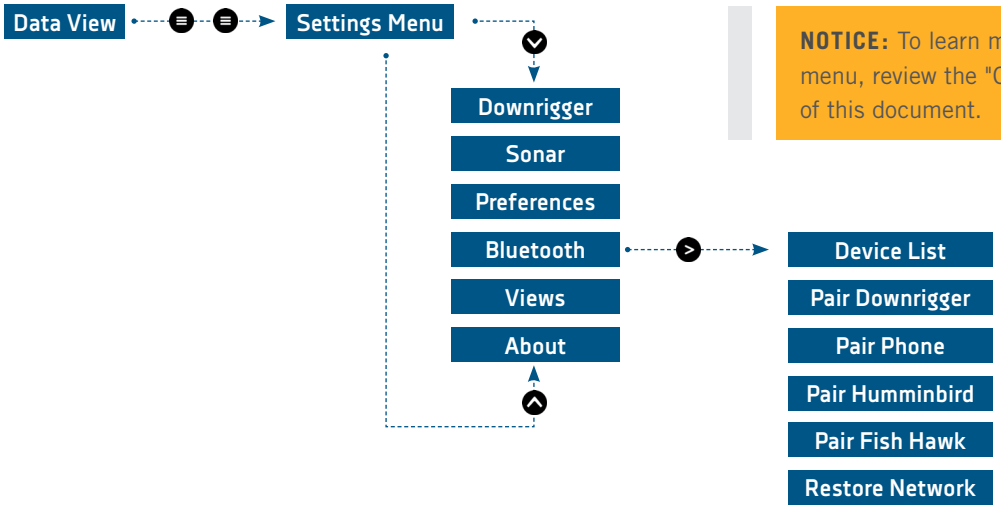

NOTICE: To learn more about the options in this menu, review the "Connecting the Downrigger" section of this document.

DEVICE LIST - Only visible when the downrigger is paired or connected to another piece of equipment such as another downrigger, a Fish Hawk, Cannon Transducer or mobile device. Use this list to determine what the downrigger is connected to and manage the list. The list gives the option to forget or disconnect equipment individually when working with the Network.

PAIR DOWNRIGGER - Menu selection that is used to pair the downrigger to another downrigger.

PAIR PHONE - Selection used to pair the downrigger to a mobile device.

PAIR HUMMINBIRD - Used to pair the downrigger to a Humminbird fish finder. It is important to install the latest software update on your Humminbird fish finder to enable Cannon features. For the SOLIX Series version 3.710 and later is required and for the HELIX G2N/G3N Series version 2.250 and later is required. To check for compatibility or update your fish finder, please visit humminbird.com for details.

PAIR FISH HAWK - Used to pair the downrigger to a Fish Hawk.

RESTORE NETWORK - Only visible when a network is set up. Removes all paired devices from the downrigger network at once.

VIEWS MENU

Navigate to the Views Menu by double pressing the Menu button from any downrigger View to first open the Settings Menu. Use the Up button and the Down button to find Views in the Settings Menu. Use the Right button to select Views and open the Views Menu. This opens the Views Menu used to toggle Views on the downrigger Color LCD "on" or "off". View 1 is not listed because it cannot be turned "off". Use the Right button to toggle each view "on" and "off". When the box to the right of the listed View shows a check mark, the View is turned "on". Below is a list of the default settings for each View. To learn more about Views, please see the "Views" section of this document.

© 2021 | Johnson Outdoors Marine Electronics, Inc. | cannondownriggers.com

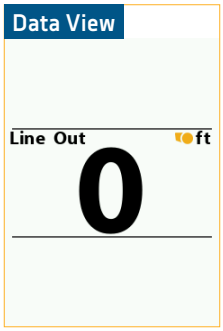

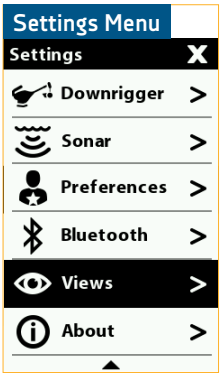

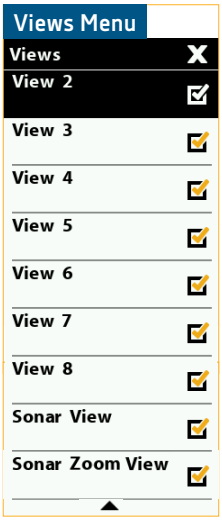

NOTICE: The Sonar View and Sonar Zoom View are only visible when the downrigger is connected to a Cannon Transducer.

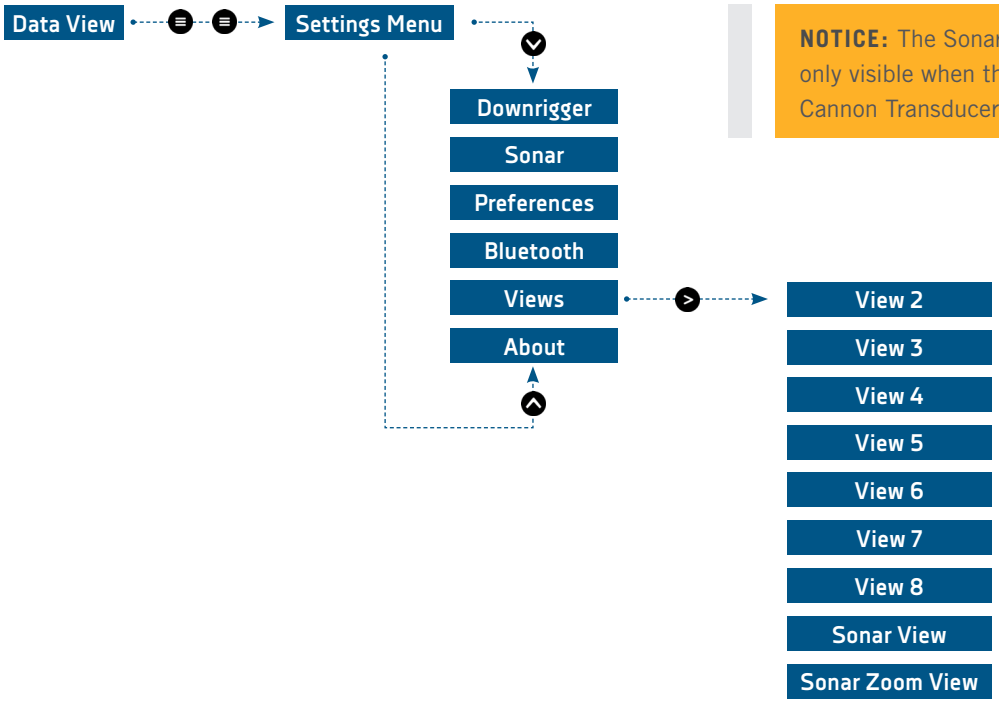

NOTICE: The Sonar View and Sonar Zoom View are only visible when the downrigger is connected to a Cannon Transducer.

VIEW 1 - Line Out - This option will not be listed on the Color LCD because it cannot be turned "on" or "off".

VIEW 2 - ➤Line Out, ➤Downrigger Mode

VIEW 3 - ➤Line Out, ➤PIC/Voltage/Reel, ➤Network Status

VIEW 4 - Line Out, Surface Depth/Surface Temp/Surface Speed, Probe Depth/Probe Temp/ Probe Speed

VIEW 5 - ➤Probe Depth, ➤Probe Speed

VIEW 6 - ➤Line Out, ➤Probe Depth, ➤Surface Depth

VIEW 7 - ➤Probe Depth, ➤Probe Speed, ➤Probe Temp

VIEW 8 - ➤Line Out, ➤Surface Depth

SETTINGS MENU

SONAR VIEW - Line Out, Probe Depth/Probe Temp/Probe Speed, Surface Depth, Sonar

SONAR ZOOM VIEW - Line Out, Probe Depth/Probe Temp/Probe Speed, Surface Depth, Sonar Zoom

ABOUT MENU

Navigate to the About Menu by double pressing the Menu button from any downrigger View to first open the Settings Menu. Use the Up button and the Down button to find About in the Settings Menu. Use the Right button to select About and open the About Menu. This menu lists helpful information specific to the downrigger. None of the information that this menu provides is editable.

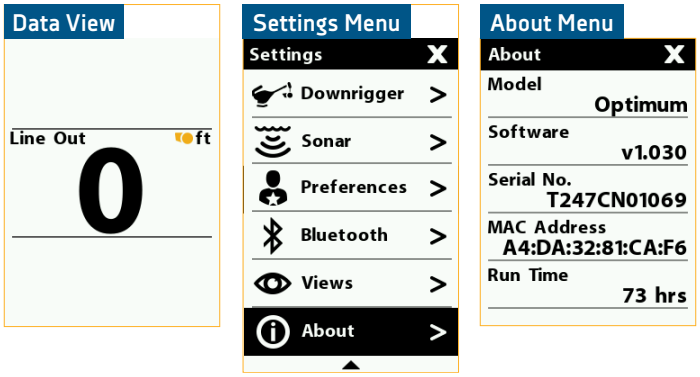

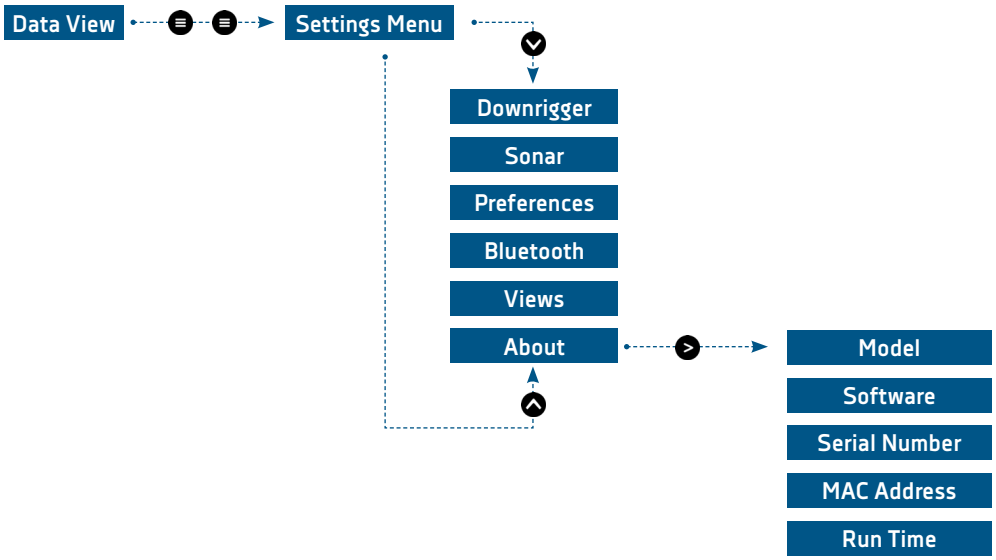

MODEL - Lists the downrigger model. Either an Optimum or Optimum TS.

SOFTWARE - Lists software version the downrigger is running.

SERIAL NUMBER - Lists the serial number of the downrigger.

MAC ADDRESS - Lists the MAC address of the downrigger.

RUN TIME - The time the downrigger has ran in hours.

© 2021 | Johnson Outdoors Marine Electronics, Inc. | cannondownriggers.com

POWER MENU

The Power Menu is accessed by pressing the Power > button once. The Power > button gives the user the ability to power the downrigger "off", power all downriggers in the network "off", adjust the backlight, change the Display Mode and Sonar Pinging. Press the Power > button and hold for three seconds to power the downrigger "off"



NOTICE: When the downrigger is connected to a Network with other downriggers, a Power Off All option is available in the Power Menu. This allows all of the downriggers to be powered "off" at once.

POWER OFF - Use the Right > button to select to power the downrigger "off".

BACKLIGHT - Adjust the brightness of the Color LCD backlight on a scale from 1 to 10. Use the Right > button or the Left < button to edit the sliding scale. The default is 10.

DISPLAY MODE - Sets the Color LCD to either Day Mode or Night Mode. Use the Right > button or the Left < button to scroll between the options. The default is set to Day Mode.

SONAR PINGING - Turns Sonar Pinging to either "on" or "off". Use the Right > button or the Left < button to scroll between the options. The default is set to "on".

OPTIMUM - THE CANNON APP

THE CANNON APP

Cannon offers an app that can be used to control and update the Optimum and Optimum TS using a Bluetooth® enabled device. The Cannon app is available for download on iOS devices through the Apple App store or Android devices through the Google Play store.

NOTICE: To learn more about how to pair a device with the Cannon app to a network and to learn how the Cannon app functions within the network, please review the "Connecting the Downrigger" section of this document.

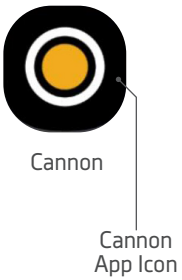



NAVIGATING THE CANNON APP

The basic navigation structure of the Cannon app is as follows:

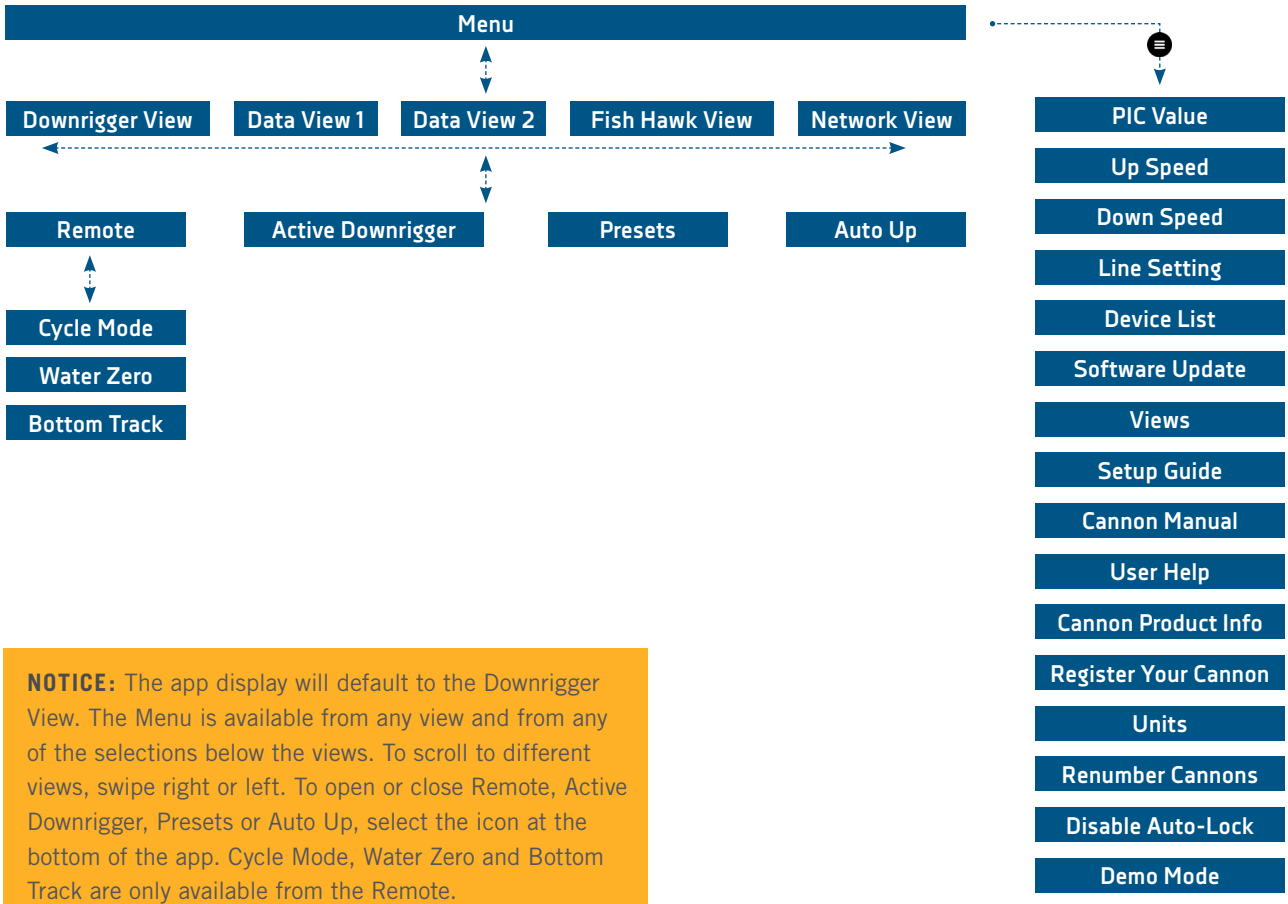

NOTICE: The app display will default to the Downrigger View. The Menu is available from any view and from any of the selections below the views. To scroll to different views, swipe right or left. To open or close Remote, Active Downrigger, Presets or Auto Up, select the icon at the bottom of the app. Cycle Mode, Water Zero and Bottom Track are only available from the Remote.

© 2021 | Johnson Outdoors Marine Electronics, Inc. | cannondownriggers.com

DOWNRIGGER VIEW

The Downrigger View is the default View that the Cannon app displays. The Downrigger View gives the user access to the Remote, additional downriggers if connected in a Network, Presets, Auto Up and the App Menu.

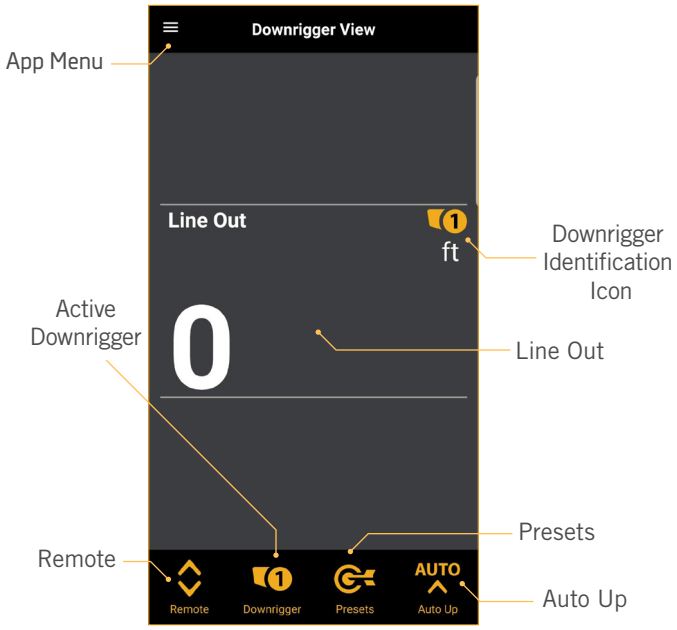

REMOTE - The Remote button toggles the Remote "on" and "off". Displays downrigger control buttons for Cycle Mode, Water Zero, and Bottom Tracking. Also displays basic downrigger control such as the Up ^ button and the Down v button.

ACTIVE DOWNRIGGER - The Downrigger button toggles the Downrigger screen "on" and "off" and allows to select and function other downriggers on the network. This icon only appears when the downrigger is networked with more than one downrigger.

PRESETS - Displays the Preset Depths and the recorded depth for Last Depth Recall. If Last Depth Recall is not recorded, it will not be displayed.

AUTO UP - Toggled "on" and "off" to select a specific downrigger to engage Auto Up. Also allows all downriggers to be engaged in Auto Up at the same time.

APP MENU - Opens the app Menu. Use the Menu to access additional downrigger controls. See the App Menu section of this manual for more information.

DOWNRIGGER IDENTIFICATION ICON - Displays the number of the downrigger that is being controlled. If there is only one downrigger in the network, the number will be absent. The Icon will match the number on the Downrigger button. Can range from 1 to 4, or will be blank.

LINE OUT - Displays the count for Line Out.

ADDITIONAL VIEWS

While the Downrigger View is the default view that the Cannon app displays, there are additional views that can be displayed to preview more information on the downriggers being controlled. These views include Data View 1, Data View 2, Fish Hawk View and the Network View. From the Downrigger View, the other views can be toggled to by swiping either left or right on the device screen from the Downrigger View. Not every view is available by default. Data View 1 and Data View 2 are defaults and will show if there are no other devices networked to the downrigger. The Fish Hawk View will only display if the downrigger is networked to a Fish Hawk. The Network View will only be available if the downrigger is connected to at least one other downrigger. See the Connecting the Downrigger section of this manual for more information on connecting a Fish Hawk or additional downriggers. In the App Menu, any available View can also be toggled "on" or "off".

NOTICE: Data Views can also be edited by pressing and holding the data box on the app.

DATA VIEW 1 - Line Out, Downrigger Mode

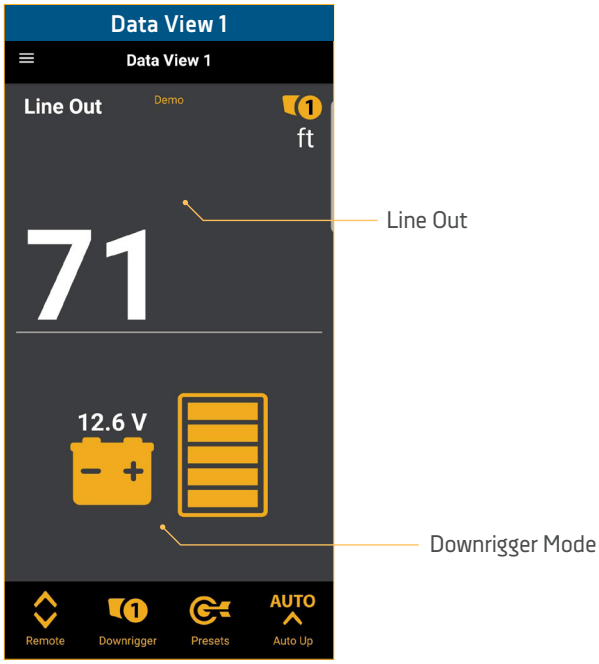

DATA VIEW 2 - Line Out, Downrigger Mode, PIC/Voltage/Spool

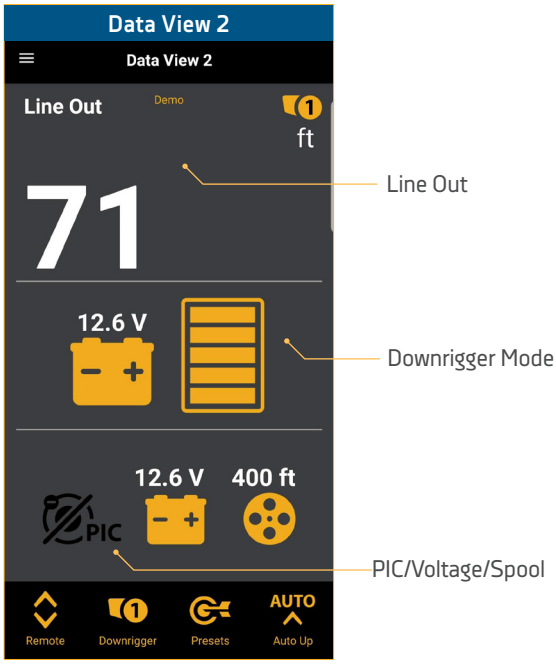

© 2021 | Johnson Outdoors Marine Electronics, Inc. | cannondownriggers.com

FISH HAWK VIEW - Line Out, Surface Depth/Surface Temp/ Surface Speed, Probe Depth/Probe Temp/Probe Speed

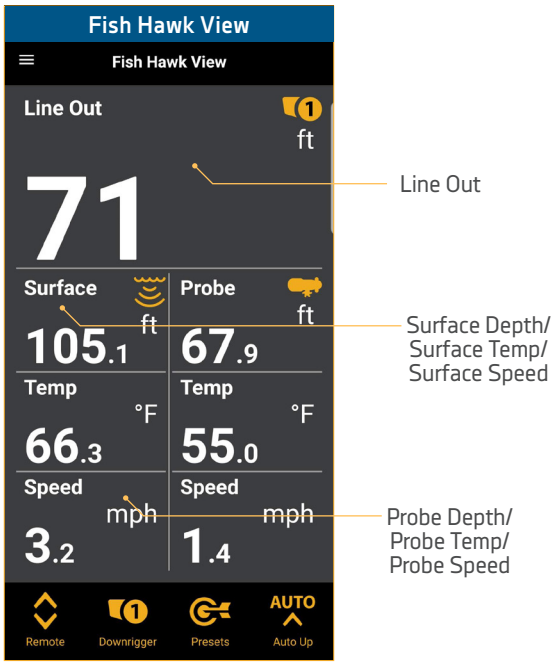

NETWORK VIEW - Line Out - Downrigger 1, Line Out - Downrigger 2, Line Out - Downrigger 3, Line Out - Downrigger 4

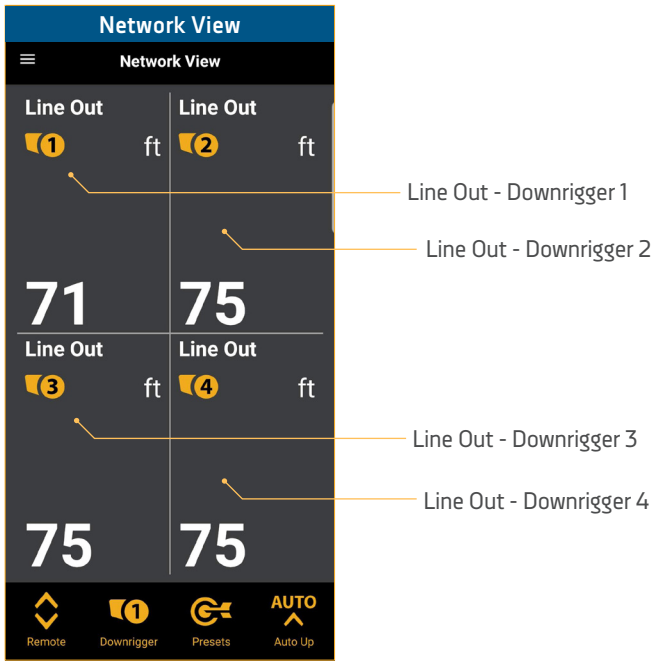

REMOTE

The Remote on the Cannon app is going to be the central location for controlling the downrigger. It is the location in the app where Cycle Mode, Water Zero and Bottom Tracking will be controlled. It is also where the Up and Down buttons are located to manually control the position of the Weight. When there are multiple downriggers connected in a Network, the Cannon app will have control of each. The Downrigger Identification Icon on the top right indicates which downrigger the Remote is controlling.

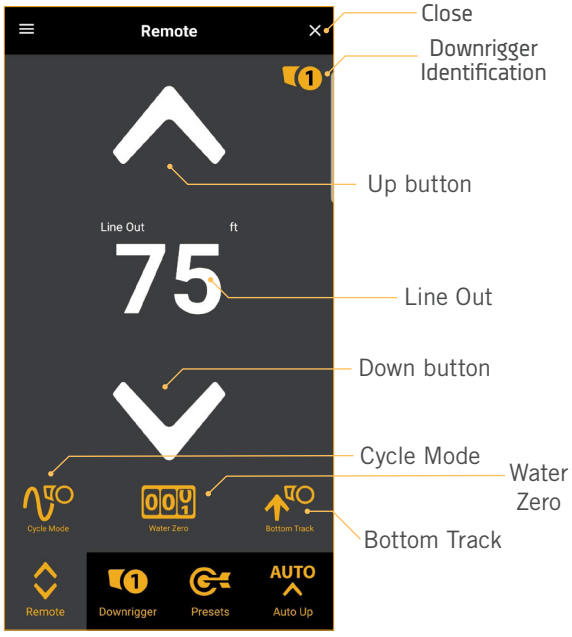

CYCLE MODE - Opens the Cycle Mode Menu. To learn more about Cycle Mode, please see the Cycle Mode section of this manual.

WATER ZERO - Use to reset the line counter to Water Zero. When confirmed, the line counter will reset the line counter to Zero.

BOTTOM TRACK - Opens the Bottom Track Menu. To learn more about Bottom Track, please see the Bottom Track section of this manual.

NOTICE: When either Cycle Mode or Bottom Track are running, the icon are outlined. When one is running, the other cannot be. If one is running it will be outlined and the other will be grayed out and not selectable. Once the feature is turned off, the icon will be selectable again.



Cycle Mode

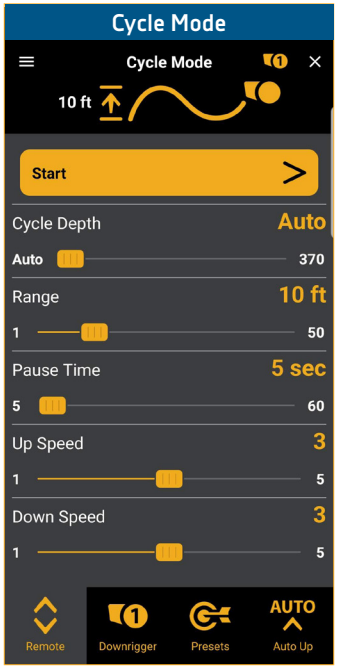

Water Zero



Bottom Track



Select Depth

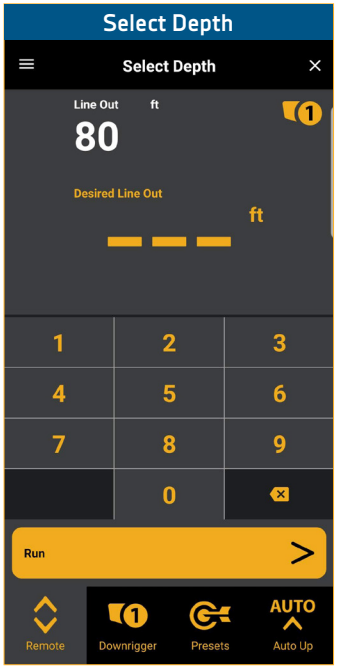

NOTICE: When the remote is displayed, selecting Line Out will allow you to bring up the Select Depth screen where you can input in the depth you want the Line Out to travel to. It will then automatically move the weight to that depth.

© 2021 | Johnson Outdoors Marine Electronics, Inc. | cannondownriggers.com

ACTIVE DOWNRIGGER

When downriggers are connected in a Network, it is possible to toggle control of each individual downrigger in the network. The Active Downrigger button is only available when more than one downrigger is networked and will not appear if the Cannon app is controlling a single downrigger.

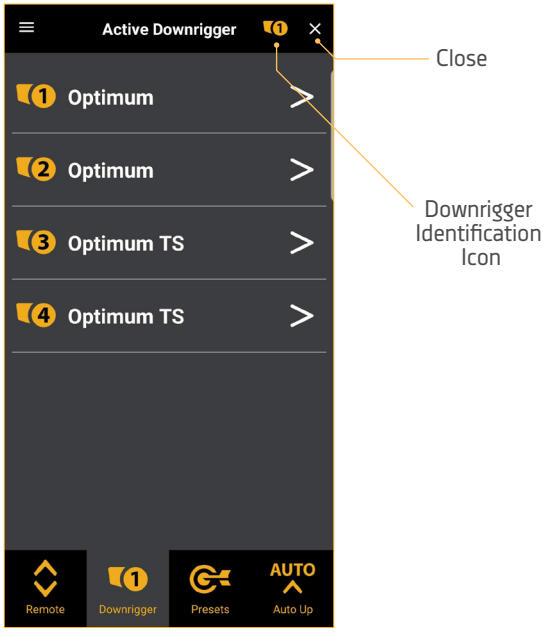

PRESETS

Use the Presets to automatically send the downrigger Weight to a Preset Depth. The Preset Depths can be customized on the downrigger from the Downrigger Menu under Depth Presets. If the Auto Up button on the downrigger has been engaged, the downrigger will record the depth and place it on the Presets Menu in the app as a Last Depth Recall. Last Depth Recall can be selected in the same way as a Preset.

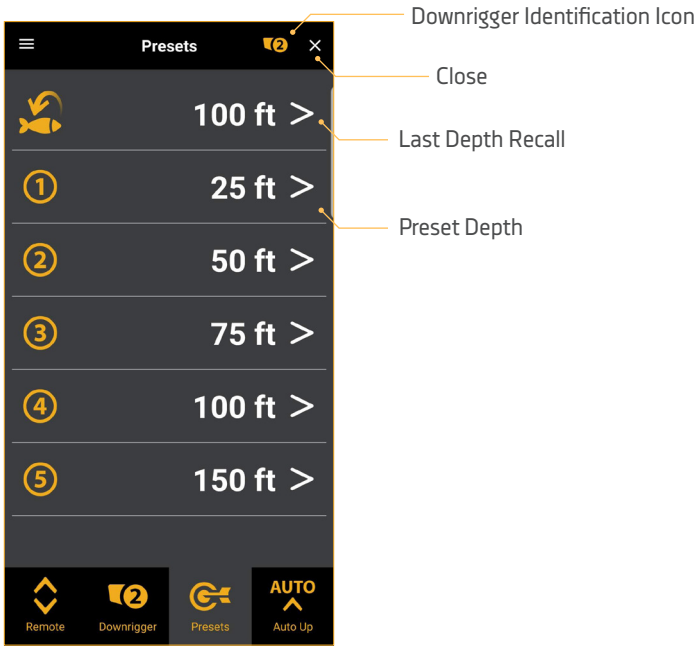

© 2021 | Johnson Outdoors Marine Electronics, Inc. | cannondownriggers.com

AUTO UP

Use the Auto Up Menu to bring the downrigger weight up with the Auto Up feature. This menu gives the user control to bring a specific downrigger up if there are multiple downriggers connected in a Network, or bring all downrigger weights in a network up at once.

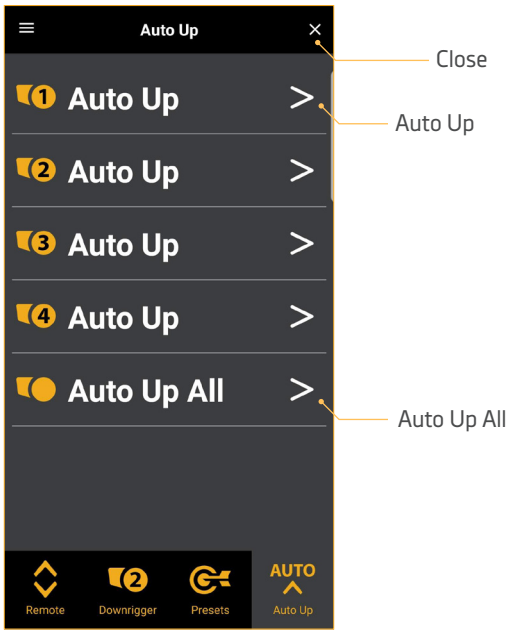

MENU

The Cannon app Menu is accessible from any of the app screens including any View and when navigating through the app using the Remote, Active Downrigger, Presets and Auto Up. Become familiar with the Menu and learn the downrigger options that can be controlled on the app.

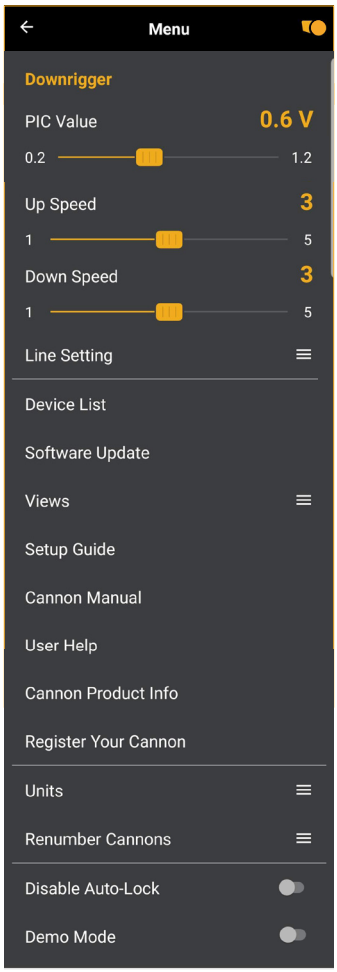

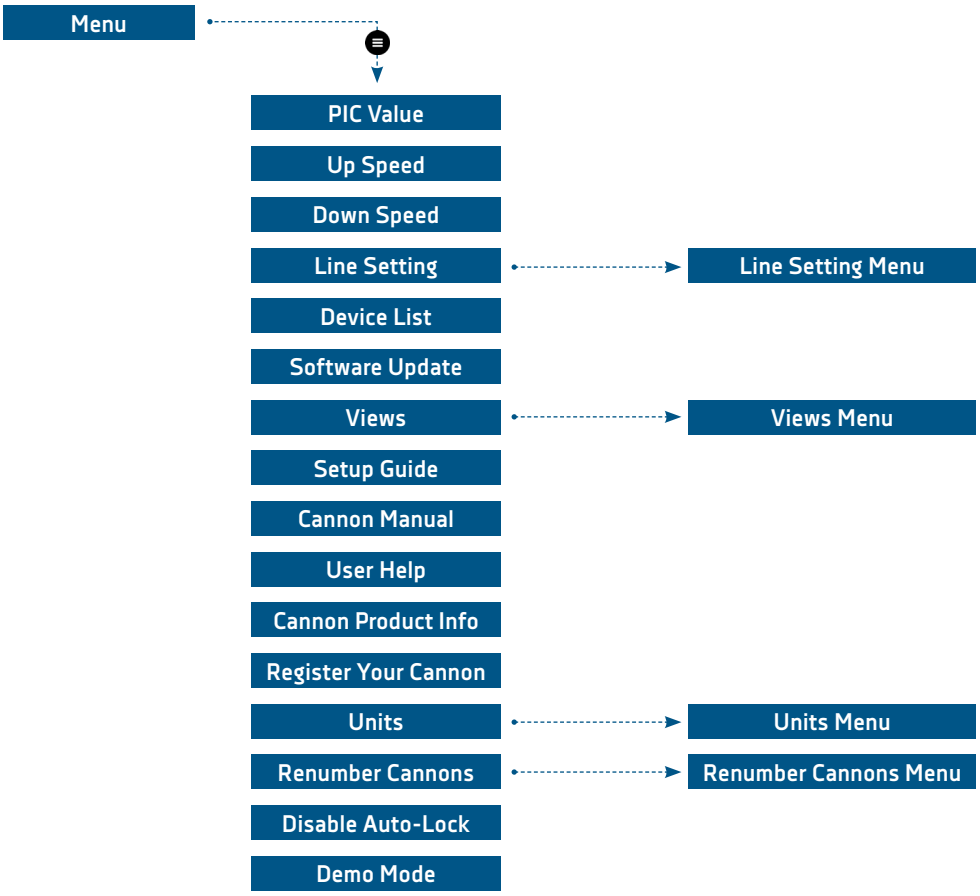

© 2021 | Johnson Outdoors Marine Electronics, Inc. | cannondownriggers.com

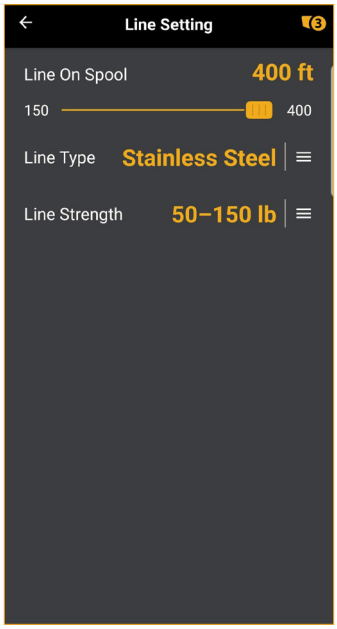

LINE SETTING MENU - This menu option contains a sub menu to edit Line on Spool, Line Type and Line Weight.

LINE ON SPOOL - Program the downrigger with the amount of Line on the Spool. The Spool comes installed with 400 feet of stainless steel line. The Line on the Spool is set to the default of 400 feet. The range can be adjusted between the minimum of 150 feet to a maximum of 400 feet. The Line on Spool can be adjusted on 50 foot increments on a sliding scale that can be adjusted using the Right > button or the Left < button.

LINE TYPE - The default Line Type is Stainless Steel, but can be set to either Braided, Stainless Steel or Mono. Use the Right > button or the Left < button to scroll between the options.

LINE WEIGHT - The default Line Weight is 50-150lbs, but can be set to either 50-150lbs, 150-200lbs or 200+lbs. Use the Right > button or the Left < button to scroll between the options.

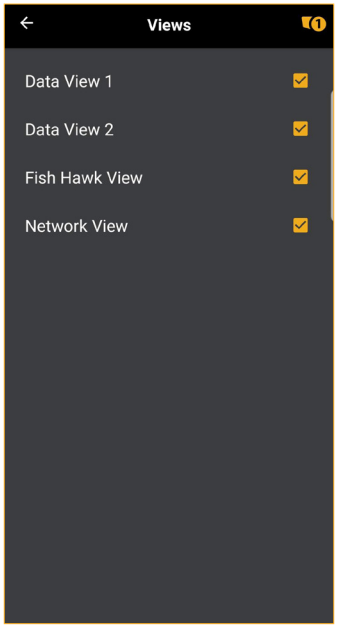

VIEWS MENU - Use the Views Menu under the main Cannon app Menu to toggle any available View "on" or "off". To learn more about the Cannon app Views, please see the "Additional Views" section of this manual.

OPTIMUM - THE CANNON APP

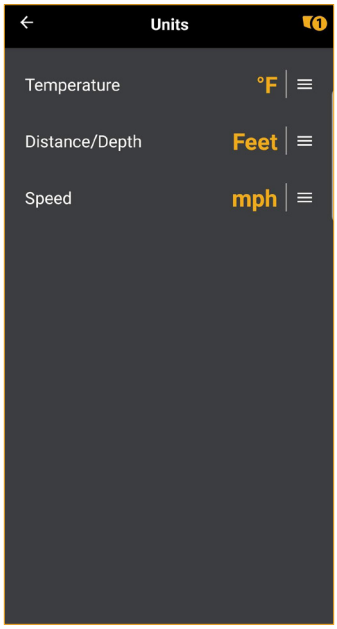

UNITS MENU - Use the Units Menu to adjust the Temperature, Distance/Depth and Speed units from the Cannon app.

TEMPERATURE - select the Menu Icon to the right of the displayed Temperature Unit. Select between °F (Fahrenheit) and °C (Celsius). The default it °F.

DISTANCE/DEPTH - select the Menu Icon to the right of the displayed Distance/Depth Unit. Select between Feet and Meters. The default it Feet.

SPEED - select the Menu Icon to the right of the displayed Speed Unit. Select between mph (miles per hour), kph (kilometers per hour) and kts (knots). The default it mph.

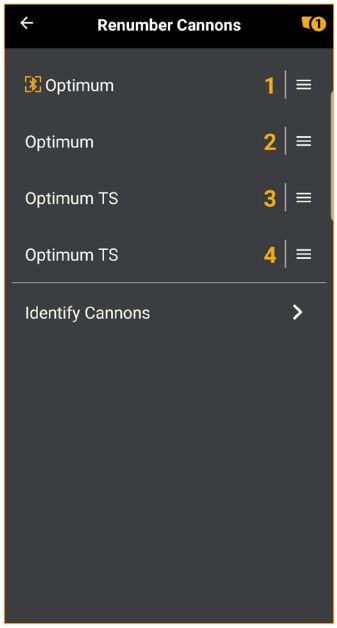

RENUMBER CANNONS MENU - Use the Renumber Cannons Menu to assign a number to the downriggers in the Network. This is helpful to control downriggers when they are paired into a network and maybe be identified on the boat at the certain location. Use the order to assign a number based on user preference to adapt to installation and location preferences. This menu is especially useful of downriggers on a Network are moved to a different location in the boat for any number of reasons.

© 2021 | Johnson Outdoors Marine Electronics, Inc. | cannondownriggers.com

ATTACHING THE CRANK HANDLE ASSEMBLY

In case of a dead battery, your downrigger comes equipped with a power loss Manual Crank Handle. This handle allows for the retrieval of your weight should you lose power or have an electrical failure. To utilize the handle follow the steps below.

1

a. Unplug the downrigger and make sure it is not connected to a power source. Then secure the Spool.

⚠ WARNING

Make sure the downrigger is not connected to a power source.

⚠ WARNING

Loosening or removing the Clutch Knob will release the Spool and allow it to run free. Make sure you secure the Spool before removing the Clutch Knob. It is recommended that you wear protective gloves and eye protection when working with the Spool.

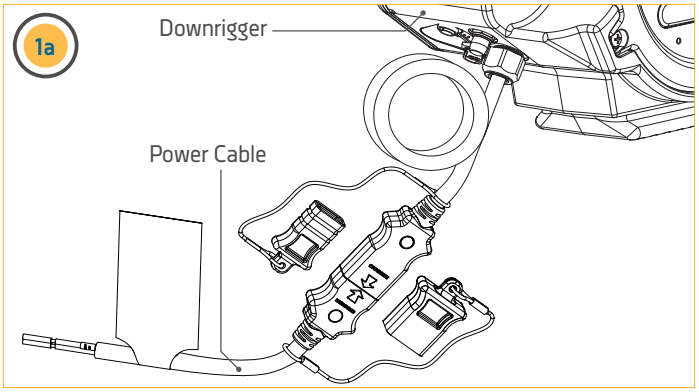

2

b. Locate the Clutch Knob on the Spool side of the downrigger.

c. Rotate the Clutch Knob clockwise to remove it from the downrigger.

NOTICE: Take care when removing the Clutch Knob over open water so you don't drop it into the water.

d. Take the Manual Crank Handle and install the handle's hex pattern to match the hex pattern on the Spool. Turn the Manual Crank Handle counterclockwise to install and tighten.

NOTICE: The Manual Crank Handle should be turned counterclockwise to install and tighten. This is also sometimes called left handed thread.

e. Once installed, turn the Manual Crank Handle counterclockwise to retrieve the weight.

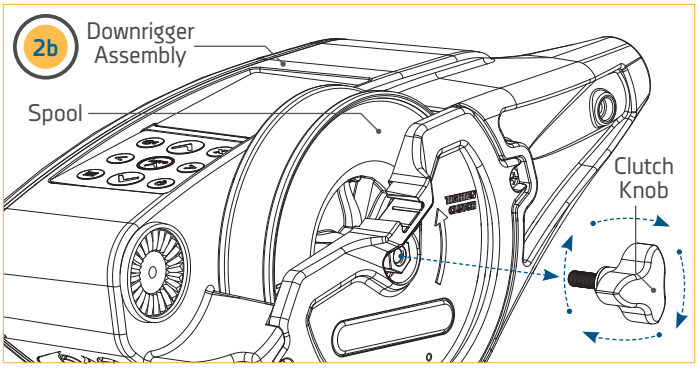

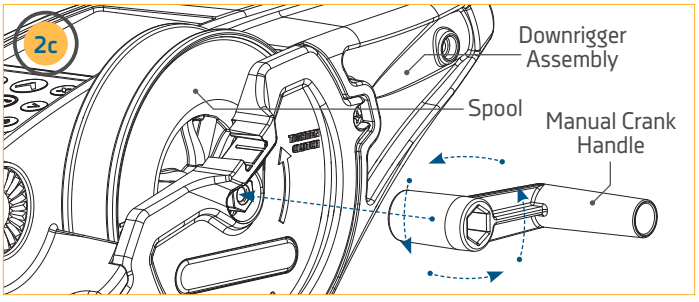

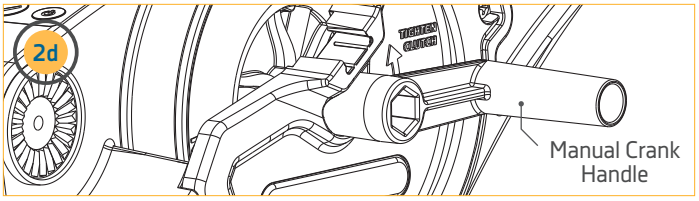

REMOVING THE SPOOL COVER AND REPLACING THE SPOOL

Your new downrigger comes with a removable Spool Cover. By removing this cover, you are able to easily gain access to remove the Spool. This feature allows you to easily access tangled line, get it repaired and get you back into action quickly. This feature also allows you to have multiple Spools for different types of line. By purchasing additional Spools, you can wind each with a different type of line (i.e. Uncoated line, Coated Line, braided, etc.). This allows you to switch out desired lines quickly and easily.

⚠ WARNING

Do not touch the Spool while the downrigger is in use.

⚠ CAUTION

Remove all tension from the line before removing or replacing the Spool.

1

a. Unplug the downrigger and make sure it is not connected to a power source. Then secure the Spool.

⚠ WARNING

Loosening or removing the Clutch Knob will release the Spool and allow it to run free. Make sure you secure the Spool before removing the Clutch Knob. It is recommended that you wear protective gloves and eye protection when working with the Spool.

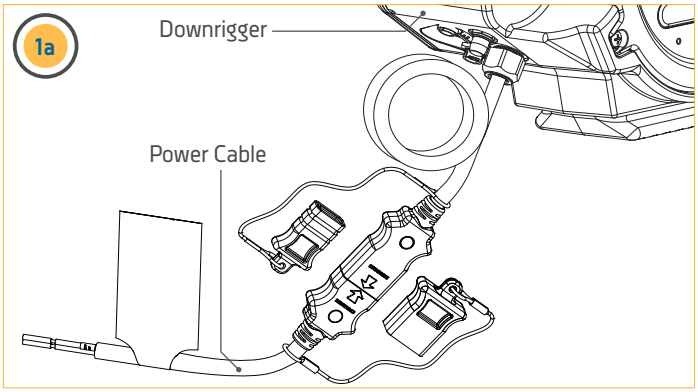

⚠ WARNING

Make sure the downrigger is not connected to a power source.

2

b. Locate the Clutch Knob on the Spool side of the downrigger.

c. Rotate the Clutch Knob clockwise to remove it from the downrigger.

NOTICE: Take care when removing the Clutch Knob over open water so you don't drop it into the water.

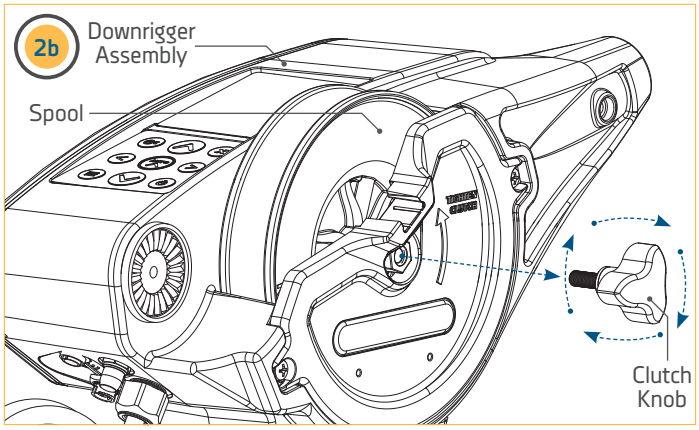

© 2021 | Johnson Outdoors Marine Electronics, Inc. | cannondownriggers.com

REMOVING THE SPOOL COVER AND REPLACING THE SPOOL

3

d. Loosen the two 1/4-20 Phillips Head Screws on opposite sides on the Spool Cover using an #2 screwdriver.

NOTICE: Screws are captured in the Spool Cover and will not come out completely.

e. With the screws loose, remove the cover to access the Spool.

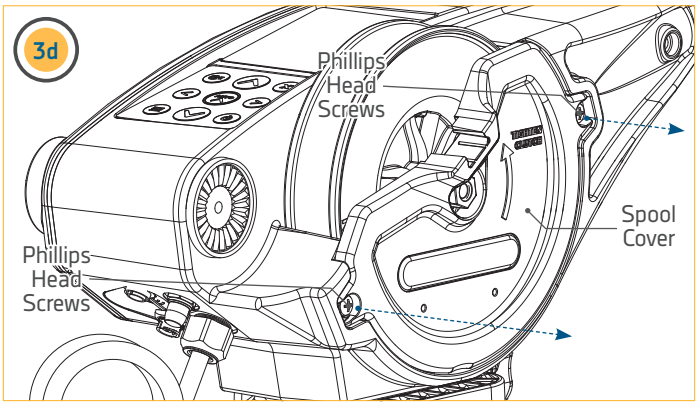

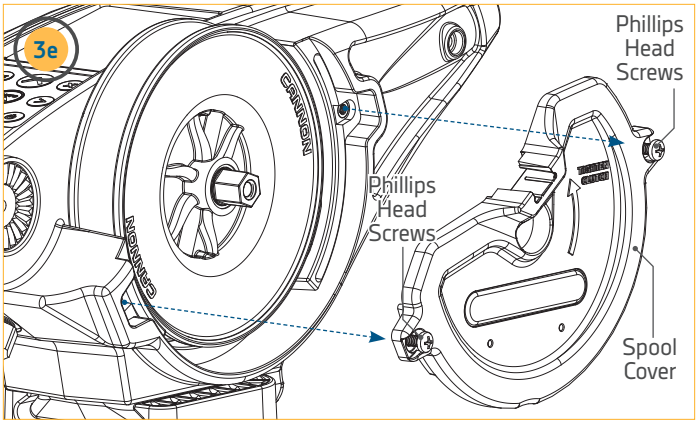

4

f. With the Spool Cover removed, carefully remove the Spool, making sure the Line is pulled free from the Downrigger Assembly.

g. Take the new Spool and turn it so that the Line is wound in a counter-clockwise direction.

h. Feed the end of the Line through the base of the Downrigger Assembly so that the end of the Line exits the Downrigger Assembly toward the Boom.

i. Pull the Line so that it is tight and void of extra slack. Avoid kinks and bends in the Line and insert the new Spool so it is seated on the Motor Shaft.

NOTICE: Take care when removing the Spool over open water that the Clutch Pad doesn't get pulled off.

NOTICE: See the "Terminating the Downrigger Line" section of this manual for more details on routing and terminating the Line of the new Spool if needed.

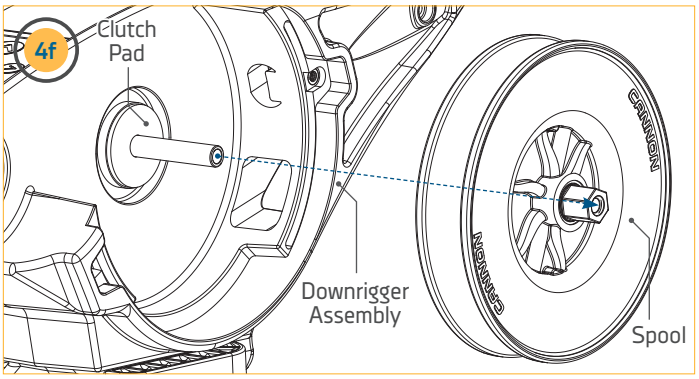

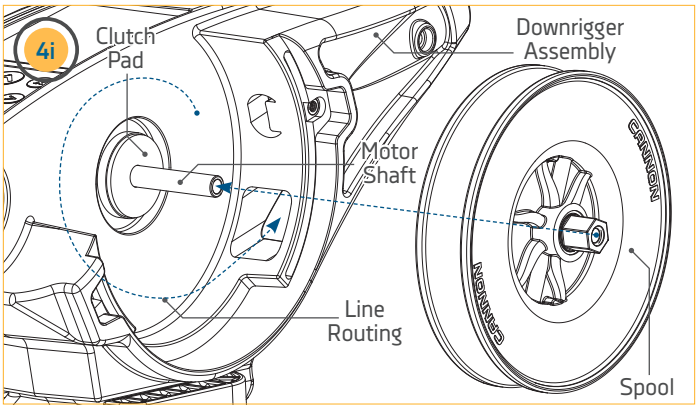

REPLACING THE CLUTCH PAD

5

j. With the Spool back in place and the Line routed accurately, replace the Spool Cover back in place on the Downrigger Assembly and secure it by tightening the Phillips Head Screws using an #2 Screwdriver.

k. Replace the Clutch Knob on the Spool side of the downrigger.

l. Rotate the Clutch Knob counter-clockwise to install it on the downrigger.

NOTICE: The Clutch Knob should be turned counterclockwise to install and tighten. This is also sometimes called left handed thread.

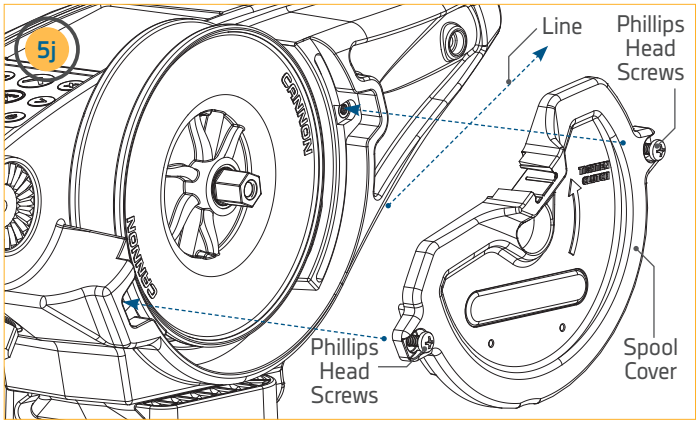

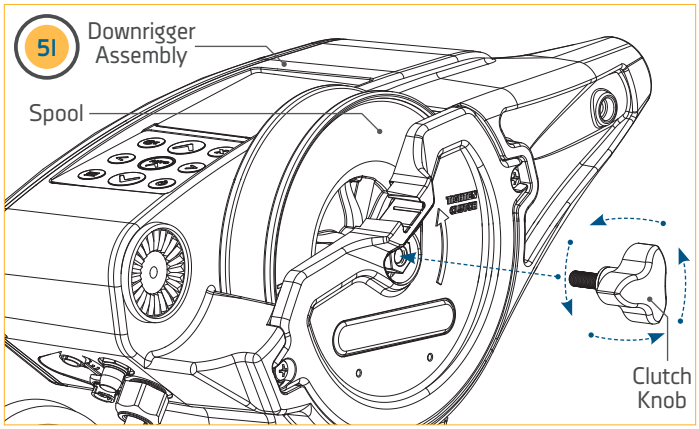

REPLACING THE CLUTCH PAD

To replace the Clutch Pad, follow the steps for "Removing the Spool and Replacing the Spool" in this Manual. Once the Spool is removed, you have access to the Clutch Pad. Simply pull it off the Motor Shaft and replace. Reassemble the Spool and Spool Cover in the reverse order.

⚠ WARNING

Do not touch the Spool while the downrigger is in use.

⚠ CAUTION

Remove all tension from the Line before removing or replacing the Clutch Pad.

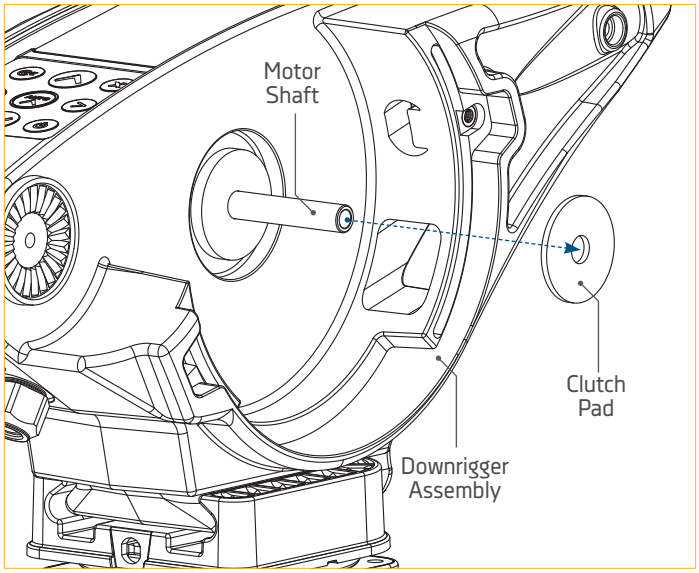

© 2021 | Johnson Outdoors Marine Electronics, Inc. | cannondownriggers.com

CABLE REPLACEMENT

To access the Spool in order to change the line, please follow the direction for "Removing the Spool Cover and Replacing the Spool". Once the cover is removed and the Spool is accessible, continue to replace the cable by following the instructions below.

⚠ WARNING

Do not touch the Spool while the downrigger is in use.

1

a. With the Spool Cover removed, carefully remove the Spool, making sure the Line is pulled free from the Downrigger Assembly.

b. The Line should be wound in a counterclockwise direction, pull it in the opposite direction to unwind it. Unwind the entire Line and remove it.

c. There will be a Crimped Sleeve at the end holding Line in place on the outside of the Spool. Take a Needle Nose Pliers to grasp the Crimped Sleeve and pull it away from the Spool. Cut the end of the Line with a Wire Cutter to remove the Crimped Sleeve and pull the old Line free.

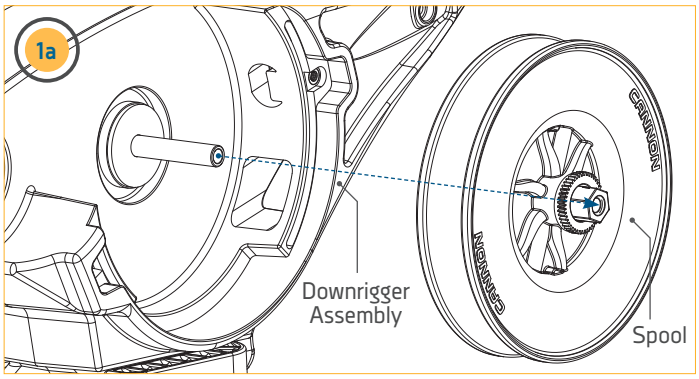



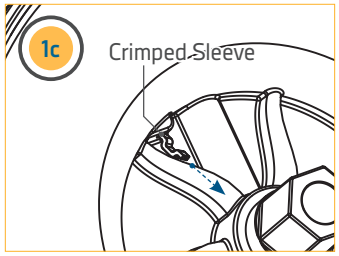

2

d. Take the new Spool and turn it so that the Line is wound in a counterclockwise direction.

e. Insert the end of the Line into the hole in the Center of the Spool so that it exits the outside of the Spool. Place a new Crimped Sleeve on the end of the Line and pull it tight into the center of the Spool.

f. Take the Spool and turn it so that the Line is wound in a counterclockwise direction. When replacing the Spool, make sure that the Line is wound counterclockwise and Exits the Downrigger Assembly. Replace the Spool following the directions provided in the "Removing the Spool Cover and Replacing the Spool" section of this manual.

g. Carefully keep tension on the Line and use the Up Switch to Wrap the Line around the Spool.

h. To finish the downrigger Line, please see the "Terminating the Downrigger" section of this manual.

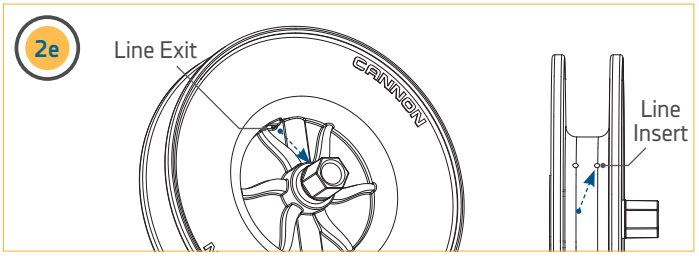

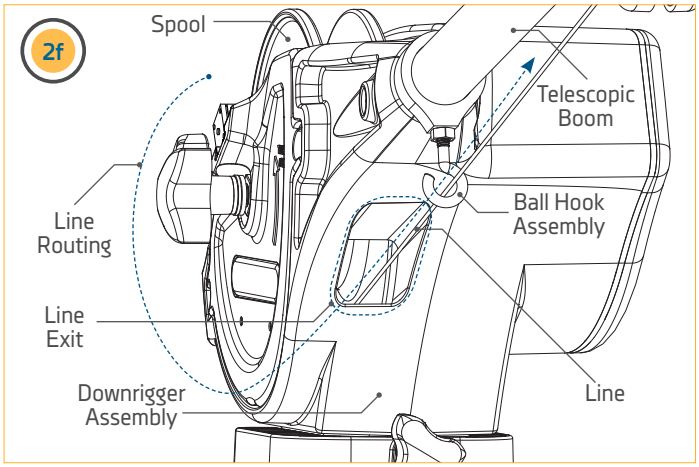

ADJUSTING THE LENGTH OF THE TELESCOPIC BOOM

1

a. To adjust the Boom length, with the Telescopic Boom extending away from you, rotate the Boom Clamps approximately ¼ turn counter-clockwise to unlock.

b. Slide the Center Tube and Middle Tube of the Telescopic Boom to the desired position.

c. Once in place, tighten the Boom Clamps by rotating clockwise until tight.

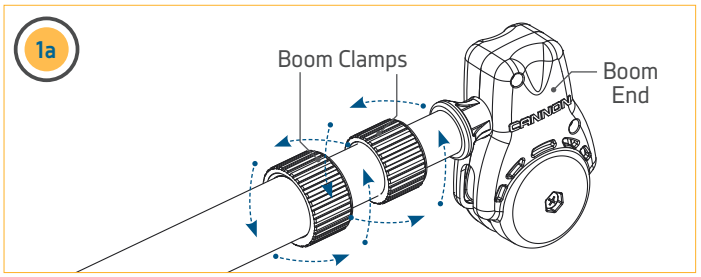

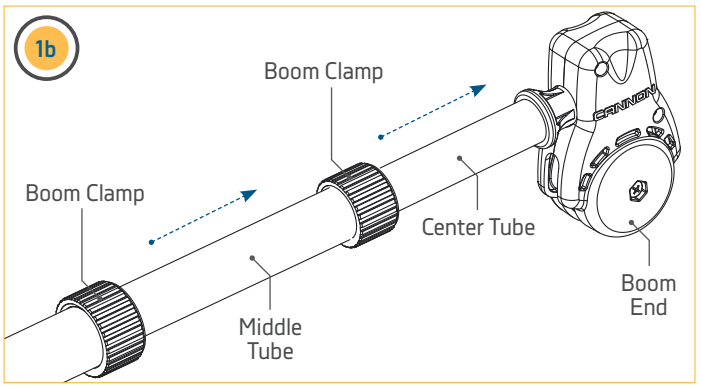

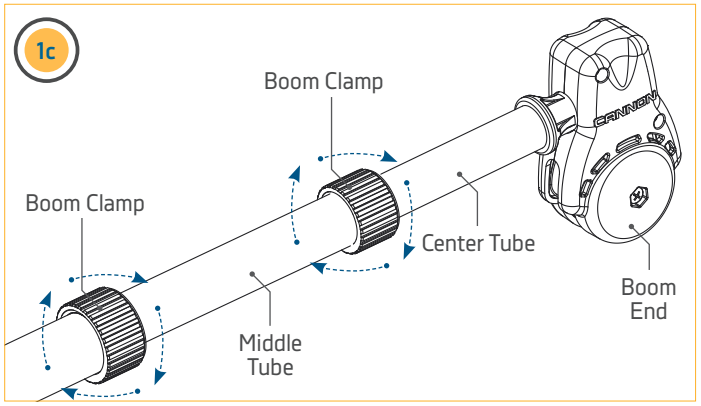

© 2021 | Johnson Outdoors Marine Electronics, Inc. | cannondownriggers.com

TROUBLESHOOTING & FAQ'S

1. When in Up or Auto-up mode, the downrigger stops periodically but the display stays on, or the Circuit Breaker trips repeatedly.
   - Low battery. The battery voltage at the Downrigger is less than 11.5 Volts (measure with a Volt Meter while the downrigger is pulling up the Weight).
   - Power Cable is too long or too small in diameter.
   - Do not overload the downrigger. It is designed to retrieve a maximum of 20 lb. weights only.
2. Downrigger does not turn "on".
   - Check polarity on Power Cable.
   - Check Circuit Breaker(s).
3. Downrigger does not count the amount of Line retrieved correctly.
   - Verify that the correct Line Type is selected. (Braided, Stainless Steel or Mono)
   - Verify Line on Spool is set to the correct length.
4. Unit does not display the correct Line Out.
   - Current was interrupted and Circuit Board was reset.
   - Check Power Cable connections and try to prevent power interruption.
   - Waterline Zero is not set correctly. Retrieve the trolling weight using the Up or Auto-Up button. Reset Waterline Zero to your desired position.
   - Verify that all magnets are present in the Spool.
   - Unplug the Power Cable for 30 seconds and then reconnect.
5. The Clutch slips.
   - Re-tighten the Clutch Knob. The Clutch Knob should be just tight enough that the Clutch does not slip when the downrigger is in normal use. Do not use tools of any kind to tighten the Clutch, hand tightening should always be sufficient. Check the Clutch Disc condition by removing Side Cover and Spool. Replace if necessary. See the Service and Maintenance section of this document for instructions.
6. The Weight on the downrigger does not stop at the water line.
   - Using the Up and Down buttons, adjust the Weight so it is at or a little below the water line. Then set Water Zero. Due to slack in the Line, the Water Zero point may shift up or down.
7. Does the Optimum support Braid and Mono line?
   - Yes – Short stop and PIC will no longer function with Braided or Mono line. When using the Auto up feature the Weight will stop when the line counter reaches zero.
8. Why is 2D sonar view only available on the Master Downrigger (downrigger with sonar cable connected to it)?
   - To display 2D sonar images it requires more information than a Bluetooth connection will allow. Therefore the only Cannon Transducer data that is shared to the other networked downriggers is Surface Depth.
9. What model of Fish Hawk Electronics is compatible with the Optimum downrigger?
   - The Optimum downrigger is compatible with the Fish Hawk X4D Bluetooth system (requires both the LCD display panel and underwater probe).
10. How do I see Surface Depth and 2D sonar readings on my Optimum downrigger?
    - Surface depth and 2D sonar data (used for the Bottom Tracking feature) is pulled from the Cannon transducer (part number 1491072) that is sold as an accessory item.

© 2021 | Johnson Outdoors Marine Electronics, Inc. | cannondownriggers.com

TROUBLESHOOTING & FAQ'S

11. Can a Digi-Troll downrigger be connected/networked to an Optimum downrigger?
    - No, the Digi-Troll 4, 5 and 10 do not support wireless networking capabilities.
12. How many Optimum downriggers can be wirelessly networked together?
    - Up to four Optimum downriggers can be wirelessly networked together.
13. What is the maximum weight that can be used on a Cannon downrigger?
    - Optimum, Optimum TS, Digi-Troll 10, Digi-Troll 10 TS, Digi-Troll 5, Digi-Troll 5 TS, Magnum 10 STX, Magnum 10 STX TS, Magnum 5, Uni-Troll 10 STX, Uni-Troll 10 STX TS an Uni-Troll 5 ST all have a weight capacity of 20 lbs.
    - Easi-Troll ST is 12lb
    - Lake-Troll is 8lb
14. How do you pair Optimum downriggers?
    - Please see the "Connecting the Downrigger" section of this manual.
15. How do I adjust my Depth Presets on my Optimum downrigger?
    - Please see the "Preset Depths & Last Depth Recall" section of this manual.
16. What frequency does the Cannon transducer run on?
    - The Cannon transducer runs at 120kHz.
17. How do you keep the Line alignment straight to keep it from stacking on one side of the Spool.
    - The simple fix is to use the ball hook on the boom as a level wind by adjusting the angle of the hook to guide the line in straight.

To watch a video on how to keep the Line alignment straight, follow the link on-line at https://youtu.be/N6NoTpH1tr8

18. How do I pair my mobile devise to my Optimum downrigger?
    - Please see the "Connecting the Downrigger" section of this manual.
19. How do I recall my Preset Depths on an Optimum downrigger?
    - Select the Preset Depths in the upper left hand corner of the Keypad to recall the Depth Presets. To activate a Preset, scroll to the desired depth and press Preset Depths again or the Right > button. Please see the "Preset Depths & Last Depth Recall" section of this manual for more information.
20. How do I adjust the screen brightness on an Optimum downrigger?
    - Press the Power button once to adjust the Backlight on the Color LCD or change the Display Mode from Day Mode to Night Mode. When multiple downriggers are networked, this change will occur on the entire network.
21. What is "Power Off All" on an Optimum downrigger?
    - When a downrigger network is established, you can power down all the downriggers on the network at the same time. To do this, Select the Power button from any downrigger, scroll to Power Off All and hit the Right > button to shut down the entire network.
22. What Power Cable is needed for replacement on a Cannon electric downrigger?
    - Cannon item number 1903017 is the replacement battery side Power Cable
    - Cannon item number 3393222 is the replacement downrigger side Power Cable
    - Cannon item number 3883220 is the replacement Power Cable kit (downrigger side and battery side)
23. What is Bottom Tracking and how does it work?
    - To learn about Bottom Tracking, please see the Bottom Tracking section of this manual.

© 2021 | Johnson Outdoors Marine Electronics, Inc. | cannondownriggers.com

24. Downrigger does not display sonar depth correctly or at all.
    - With the transducer connected, power down the downrigger, wait 30 seconds, and power on the downrigger.
25. Bottom Tracking does not work.
    - Check cable connections with transducer.
    - Check transducer mounting.

NOTICE: For all other malfunctions, visit an Authorized Service Center. You can search for an Authorized Service Center in your area by visiting our Authorized Service Center page, found on-line at cannondownriggers.com, or by calling our customer service number, 800-227-6433.

FOR FURTHER TROUBLESHOOTING AND REPAIR

We offer several options to help you troubleshoot and/or repair your product. Please read through the options listed below.

BUY PARTS

In the U.S.A., replacement parts may be ordered directly from Cannon Parts Department, 121 Power Drive, Mankato, Minnesota 56001. Be sure to provide the model and serial numbers of your downrigger when ordering parts. Please use the correct part numbers from the parts list. Payment for any parts ordered from the Cannon Parts Department may be by cash, personal check, Discover Card, MasterCard or VISA. To order, call 1-800-227-6433 or FAX 1-800-527-4464.

FREQUENTLY ASKED QUESTIONS

We have FAQs available on our website to help answer all of your Cannon questions. Visit cannondownriggers.com and click on "Frequently Asked Questions" under the "Service" tab to find an answer to your question.

CALL US (FOR U.S. AND CANADA)

Our consumer service representatives are available Monday – Friday between 7:00 a.m. – 4:30 p.m. CST at 800-227-6433. If you are calling to order parts, please have the 11-character serial number from your product, specific part numbers, and credit card information available. This will help expedite your call and allow us to provide you with the best consumer service possible. You can reference the parts list located in your manual to identify the specific part numbers.

EMAIL US

You can email our customer service department with questions regarding your Cannon products. To email your question, visit cannondownriggers.com and click on "Contact Us" under the "Service" tab.

AUTHORIZED SERVICE CENTERS

Cannon works with authorized service centers in the United States and Canada to provide parts and service for your downrigger. Please visit our "Dealer Locater" page to locate a service center in your area on-line at cannondownriggers.com.

© 2021 | Johnson Outdoors Marine Electronics, Inc. | cannondownriggers.com

COMPLIANCE STATEMENTS

ENVIRONMENTAL COMPLIANCE STATEMENT

It is the intention of JOME to be a responsible corporate citizen, operating in compliance with known and applicable environmental regulations, and a good neighbor in the communities where we make or sell our products.

WEEE DIRECTIVE

EU Directive 2002/96/EC “Waste of Electrical and Electronic Equipment Directive (WEEE)” impacts most distributors, sellers, and manufacturers of consumer electronics in the European Union. The WEEE Directive requires the producer of consumer electronics to take responsibility for the management of waste from their products to achieve environmentally responsible disposal during the product life cycle.

WEEE compliance may not be required in your location for electrical & electronic equipment (EEE), nor may it be required for EEE designed and intended as fixed or temporary installation in transportation vehicles such as automobiles, aircraft, and boats. In some European Union member states, these vehicles are considered outside of the scope of the Directive, and EEE for those applications can be considered excluded from the WEEE Directive requirement.

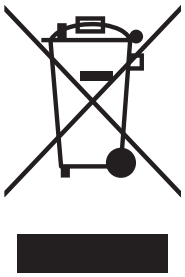

This symbol (WEEE wheelie bin) on product indicates the product must not be disposed of with other household refuse. It must be disposed of and collected for recycling and recovery of waste EEE. Johnson Outdoors Inc. will mark all EEE products in accordance with the WEEE Directive. It is our goal to comply in the collection, treatment, recovery, and environmentally sound disposal of those products; however, these requirements do vary within European Union member states. For more information about where you should dispose of your waste equipment for recycling and recovery and/or your European Union member state requirements, please contact your dealer or distributor from which your product was purchased.

DISPOSAL

Johnson Outdoors Inc. products are not subject to the disposal regulations EAG-VO (electric devices directive) that implements the WEEE directive. Nevertheless, never dispose of your Minn Kota motor in a garbage bin but at the proper place of collection of your local town council.

Never dispose of battery in a garbage bin. Comply with the disposal directions of the manufacturer or his representative and dispose of them at the proper place of collection of your local town council.

OPTIMUM REGULATORY COMPLIANCE INFORMATION

CONTROLLER : 3394050

- Contains IC: 216Q-1316
- Contains FCC ID: T7V1316



FCC COMPLIANCE

This device complies with Part 15 of the FCC rules. Operation is subject to the following two conditions:

1. This device may not cause harmful interference.
2. This device must accept any interference that may be received, including interference that may cause undesired operation.

Changes or modifications not expressly approved by Johnson Outdoors Marine Electronics, Inc. could void the user's authority to operate this equipment.

NOTICE: This equipment has been tested and found to comply with the limits for a Class B digital device, pursuant to part 15 of the FCC Rules. These limits are designed to provide reasonable protection against harmful interference in a residential installation. This equipment generates, uses and can radiate radio frequency energy and, if not installed and used in accordance with the instructions, may cause harmful interference to radio communications. However, there is no guarantee that interference will not occur in a particular installation. **If this equipment does cause harmful interference to radio or television reception, which can be determined by turning the equipment off and on, the user is encouraged to try to correct the interference by one or more of the following measures:**

- Reorient or relocate the receiving antenna.
- Increase the separation between the equipment and receiver.
- Connect the equipment into an outlet on a circuit different from that to which the receiver is connected.
- Consult the dealer or an experienced radio/TV technician for help.

INDUSTRY CANADA COMPLIANCE

This product meets the applicable Industry Canada technical specifications. Operation is subject to the following two conditions: (1) this device may not cause interference, and (2) this device must accept any interference, including interference that may cause undesired operation of the device.

Changes or modifications not expressly approved by Johnson Outdoors Marine Electronics, Inc. could void the user's authority to operate this equipment.

ENVIRONMENTAL RATINGS

Ambient operating temperature range: -10C to 50C
Ambient operating humidity range: 5% to 95%
Maximum operating altitude: 10,000 feet

RADIO OPERATION

CONTROLLER

- Frequency band: 2402 MHz to 2480 MHz
- Maximum RF power transmitted: +10 dBm

TRADEMARKS

Cannon® and Optimum™ are trademarked by or registered trademarks of Johnson Outdoors Marine Electronics, Inc.

The Bluetooth® word mark and logos are registered trademarks owned by Bluetooth SIG, Inc. and any use of such marks by Johnson Outdoors Inc is under license. Other trademarks and trade names are those of their respective owners.

© 2021 | Johnson Outdoors Marine Electronics, Inc. | cannondownriggers.com

PARTS DIAGRAM & PARTS LIST

OPTIMUM & OPTIMUM TS PARTS DIAGRAM & PARTS LIST

The parts diagram and parts list provides Cannon® WEEE compliance disassembly instructions. For more information about where you should dispose of your waste equipment for recycling and recovery and/or your European Union member state requirements, please contact your dealer or distributor from which your product was purchased. Tools required, but not limited to: flat head screwdriver, Phillips screwdriver, socket set, pliers and wire cutters.

OPTIMUM & OPTIMUM TS DOWNRIGGER

DOWNRIGGER FRAME & MOTOR PARTS DIAGRAM

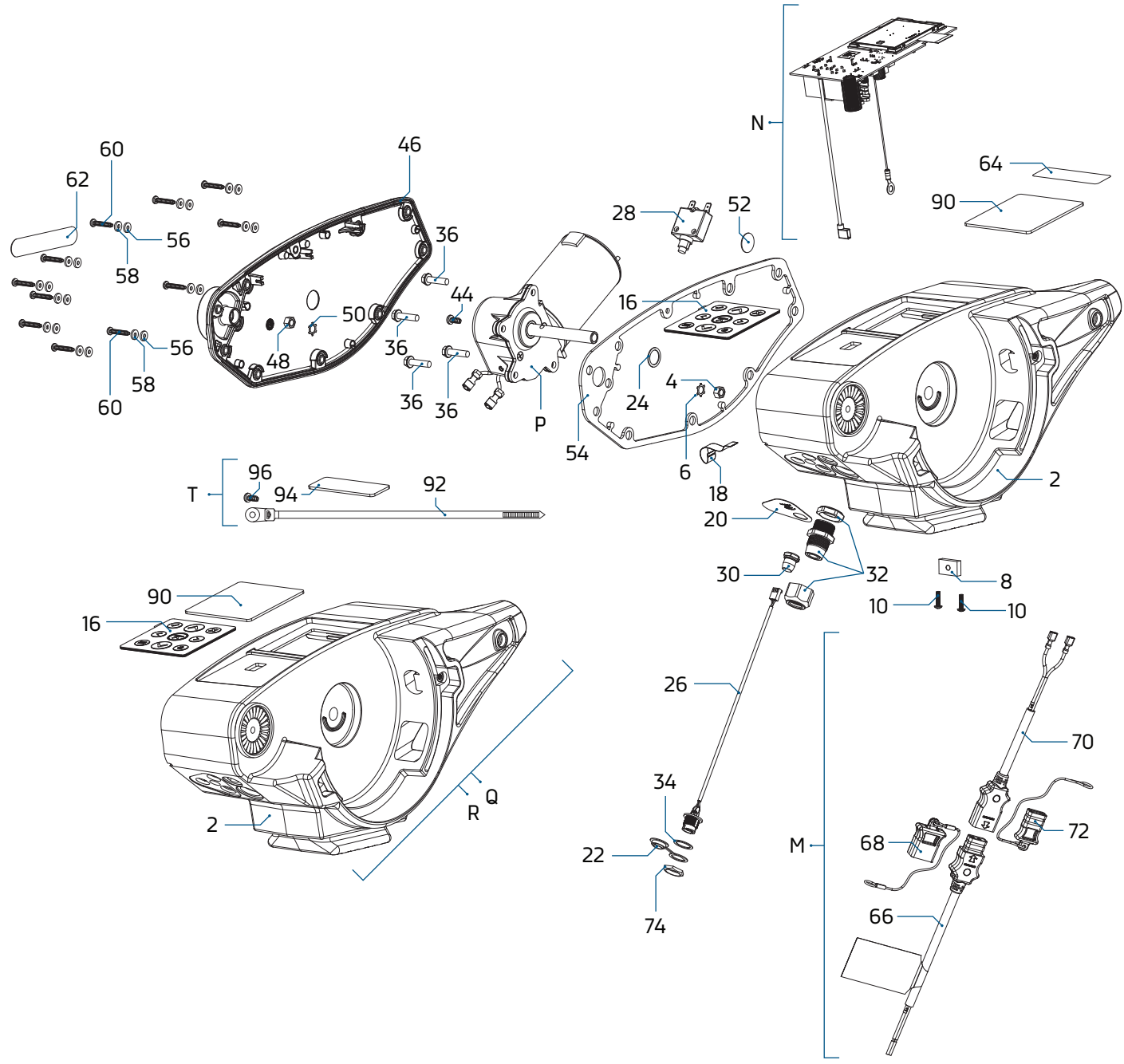

DOWNRIGGER FRAME & MOTOR PARTS LIST

Assembly	Part #	Description	Notes	Qty.
M	3993220	ASSY, POWER CABLE, RETRO		1
N	3774050	PCB ASM w/DSPLY & MOUNT		1
P	3996515	MOTOR/GEAR HOUSING ASSY		1
Q	3772547	OPTIMUM BLACK FRAME KIT		1
R	3772548	OPTIMUM WHITE FRAME KIT	♦ *TS*	1
T	3778800	DESICCANT BAG/ZIP TIE/ SCREW KIT		1
Item	**Part #**	**Description**	**Notes**	**Qty.**
2	✖	FRAME, WHT, DT BT MACH	♦ *TS*	1
	✖	FRAME, BLK, DT BT MACH		1
4	3393130	NUT-HEX 1/4-20 SS RIE COATED		1
6	3394722	INSERT, PUSH ON		1
8	3394702	INSERT, BASE, MAGNI 565		1
10	2373450	SCREW-#8-18 X 3/8" THRD.CUT SS		2
12 ▲	✖	LENS, GLASS DT BT	*See Q or R*	1
14 ▲	✖	ADHESIVE-LENS,D-TROLL BT	*See Q or R*	1
16	✖	KEYPAD, DIGI-TROLL BT		1
18	3393220	CABLE-RIBBON, KEYPAD,CNN		1
20	3396604	SEAL PLATE, DIGI-TROLL BT		1
22	700176	CON XCAP MINI-CON PANEL MOUNT		1
24	3391730	WASHER, SEAL, DATA		1
26	3391221	HARNESS, TRANSDUCER		1
28	3398205	CIRCUIT BREAKER, 25 AMP		1
30	1221491	BOOT CIRCUIT BREAKER		1
32	3392920	STRAIN-RELIEF, HEYCO M4502		1
34	3391730	WASHER, SEAL, DATA		1
36	3393411	SCREW-FLANGE HEX HI-LO		4
38 ▲	3394050	NRCN-PCB ASM, CTRL/DSPY BOARD		1
40 ▲	3391946	NRCN-MOUNT-DSPY, DIGI-TROLL BT		1
42 ▲	3397720	ADHESIVE-DISPLAY,DIGI-TROLL BT		1
44	3393486	SCREW-#10-16 X .25" BT		1
46	3390204	COVER, MOTOR TS	♦ *TS*	1
	3390203	COVER, MOTOR		1
48	3393130	NUT-HEX 1/4-20 SS RIE COATED		1
50	3394722	INSERT, PUSH ON		1
52	401966-3	MIC VENT,PTFE LU LRA MATERIAL		1
54	3396902	GASKET, COVER		1
56	3391732	WASHER, SEALING		11

▲ *Not shown on Parts Diagram.*
✖ *This part is included in an assembly and cannot be ordered individually.*
✚ *Only one assembly is available with the tournament Cannon Optimum TS.*
♦ *Only available with the Optimum TS series downrigger.*

© 2021 | Johnson Outdoors Marine Electronics, Inc. | cannondownriggers.com

Item	Part #	Description	Notes	Qty.
58	3394602	WASHER-FLAT #8 SS		11
60	3393480	SCREW-#10 X 1.0" PPH HI-LO SS		11
62	3395634	DECAL- SIDE, BLACK	*CANNON DECAL*	2
64	3395711	DECAL-PIC, TS	♦ *TS* *PIC DECAL*	1
	3395710	DECAL-PIC BLACK	*PIC DECAL*	1
66	3393200	CABLE-POWER, BATTERY		1
68	3393201	CAP ASSY, POWER CABLE, BATTERY		1
70	3393222	CABLE-POWER, MOTOR, RETRO		1
72	3393210	CAP ASSY, POWER CABLE, MOTOR		1
74	3393113	NUT, HEX, NYLON, 5/8"		1
76 ▲	3395091	CTN-LABELED, DT 10 BT		1
78 ▲	3395092	CTN-LABELED, DT TS 10 BT		1
80 ▲	3397137	MANUAL, DIGITROLL 10 BT		1
82 ▲	3397138	INSTRCT, INSTALL, OPTIMUM		1
84 ▲	3397139	MANUAL DISCLAIMER DWNLOAD INFO		1
86 ▲	3397150	QUICK REF. GUIDE, OPTIMUM		1
88 ▲	3395800	DECAL, WARNING, POWER CABLE		1
90	3998410 ✖	LENS w/ADH, GLASS DT BT		1
92	3396301	WIRE TIE W/MOUNTING SCREW HOLE		1
94	3398800	DESICCANT		1
96	3393471	SCREW-#6-19 X 3/8 TORX ZP		1

▲ *Not shown on Parts Diagram.*
✖ *This part is included in an assembly and cannot be ordered individually.*
✚ *Only one assembly is available with the tournament Cannon Optimum TS.*
♦ *Only available with the Optimum TS series downrigger.*

BASE & INSTALLATION HARDWARE PARTS DIAGRAM

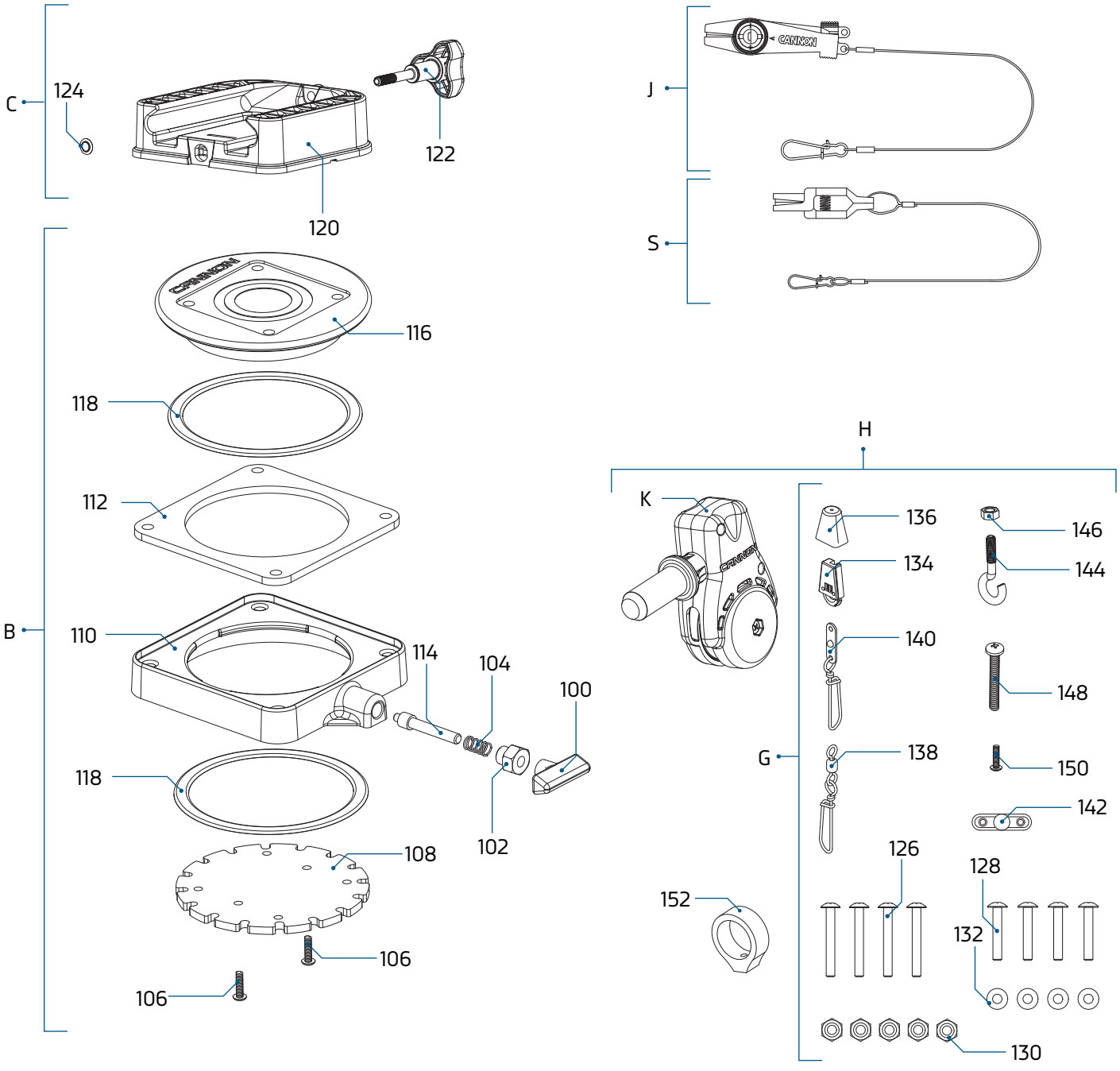

© 2021 | Johnson Outdoors Marine Electronics, Inc. | cannondownriggers.com

BASE & INSTALLATION HARDWARE PARTS LIST

Assembly	Part #	Description	Notes	Qty.
B	3991913	CNN ASSY, SWIVEL BASE		1
C	3991930	ASSY-CNN, MNT BASE DT/MAG		1
G	3994807	ASSY-BAG, DT PRO/MAG ST		1
K	3990200	ASSY-CNN, BOOM END		1
H	3994815	BAG ASSY, BOOM END		1
J	2277002	ASY HDW RELEASE UNIVERSAL		2
S	2200109	SALTWATER RELEASE, OR8 BE	♦ *TS*	2
Item	**Part #**	**Description**	**Notes**	**Qty.**
100	2249001	HDW KNB RELEASE PIN		1
102	2277001	HDW RETAINER RELEASE NUT		1
104	2287002	HDW SPRING RELEASE PIN		1
106	2372100	SCREW-#8-18 X 5/8 THD* (SS)		2
108	3391999	PLATE-INDEX, SWIVEL BASE		1
110	3391923	BASE, SWIVEL MOLDED		1
112	3391958	PLATE, SUPPORT TOP		1
114	3392600	PIN - RELEASE		1
116	3396430	TOP, SWIVEL MOLDED		1
118	9010004	HDW BEARING SWIVEL BASE		2
120	3391955	BASE-MOUNT, MAG ST		1
122	3390101	KNOB-CANNON, SOFT GRIP		1
124	3393000	RING, RETAINING, 1/4" SHAFT		1
126	9280720	HDW SCR 1/4 20X2 TRUSS HD PHIL		4
128	9280713	HDW SCR 1/4 20X1 1/2 TRUSS HEA		4
130	2263103	NUT-1/4-20 NYLOCK SS		5
132	2371712	WASHER-FLAT 9/32 X 5/8 X 1/16		4
134	9100100	CON TERMINATOR		1
136	9100101	CUSHION SLEEVE TERMINATOR		1
138	9100620	HDW SNAP SWIVEL 4/0-37 MARLIN		1
140	2200148	ASY SNAP & INSULATOR		1
142	✖	CON CABLE INSULATOR		1
144	9040040	HDW BOLT 1/4-20 ROLLEDTHD HOOK		1
146	2263102	NUT-HEX 1/4-20 SS 300SRS		1
148	3393461	SCREW-1/4-20 x 2" SS, PPH		1
150	2372100	SCREW-#8-18 X 5/8 THD* (SS)		1
152	3397900	BALL HOOK EXTRUSION		1

▲ *Not shown on Parts Diagram.*
✖ *This part is included in an assembly and cannot be ordered individually.*
✚ *Only one assembly is available with the tournament Cannon Optimum TS.*
♦ *Only available with the Optimum TS series downrigger.*

© 2021 | Johnson Outdoors Marine Electronics, Inc. | cannondownriggers.com

SPOOL & COVER PARTS DIAGRAM

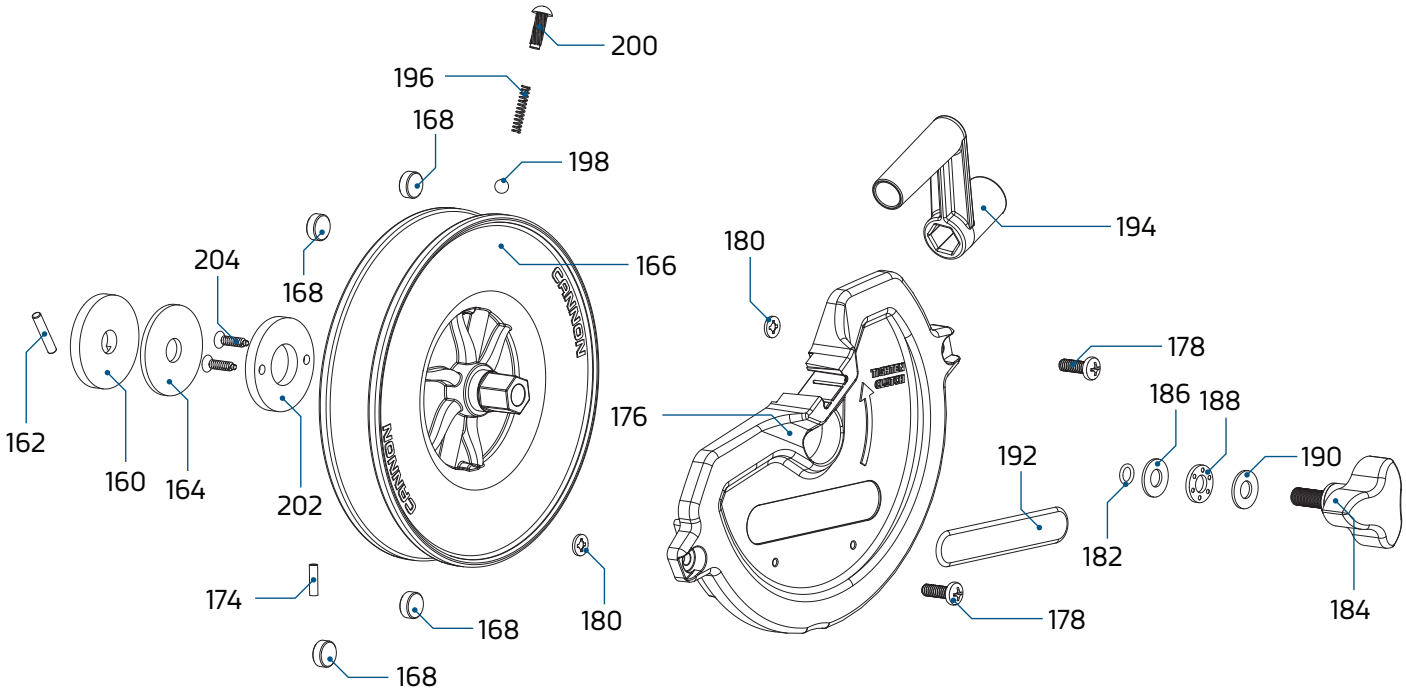

OPTIMUM

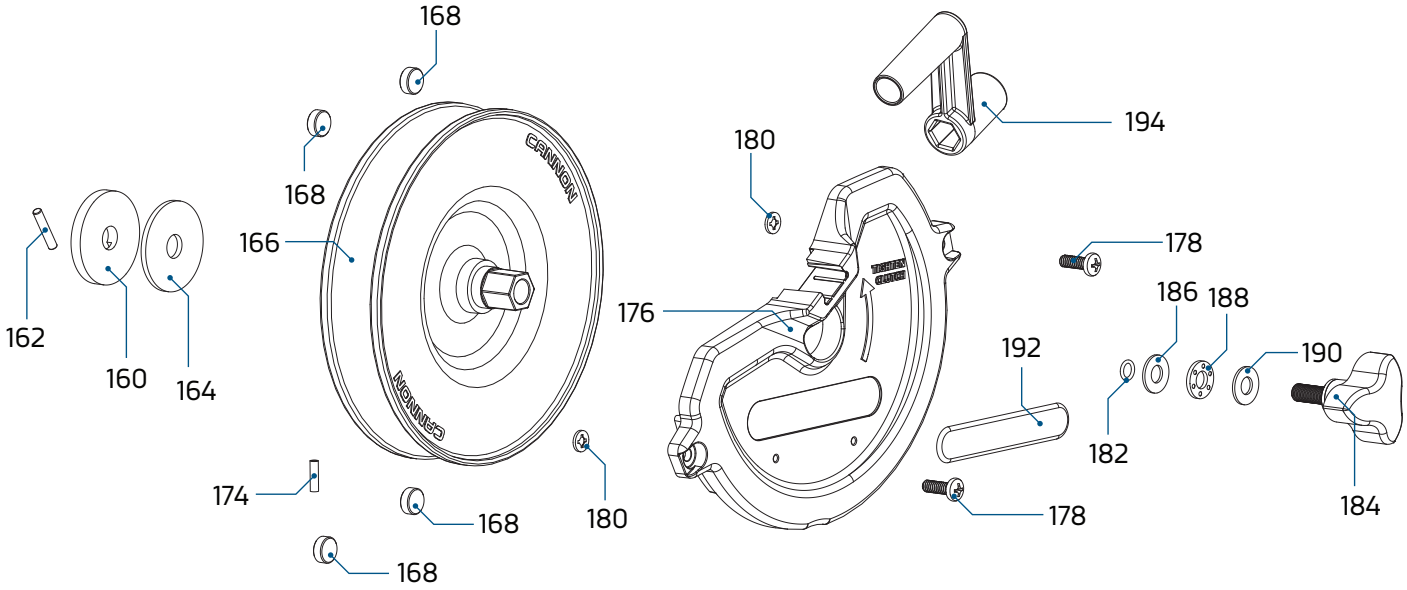

OPTIMUM TS

© 2021 | Johnson Outdoors Marine Electronics, Inc. | cannondownriggers.com

SPOOL & COVER PARTS LIST

Item	Part #	Description	Notes	Qty.
160	3391907	PLATE, CLUTCH SHAFT		1
162	3392640	PIN, DRIVESHAFT		1
164	3391711	PAD, CLUTCH, LO-PRO		1
166	3397908	REEL, ROUGH 3.75" OD SS	♦ *TS*	1
	3397907	REEL, ROUGH, 3.75" OD		1
168	1459666	CERAMIC MAGNET P/N 42-B-5020		4
170 ▲	3775397	400' CABLE		1
172 ▲	3396300	RUBBER BAND 7" #117-B		1
174	9100070	CON LEADER SLEEVE		1
176	3390206	COVER, REEL TS	♦ *TS*	1
	3390205	COVER, REEL		1
178	2373434	SCREW-1/4-20 X 3/4 SS PPMS		2
180	2071718	WASHER #10 NYLON RETAINING		2
182	3394605	O-RING, KNOB		1
184	3390103	KNOB, SOFT GRIP, CLUTCH		1
186	3391737	HDW WASHER,THRUST,17-7 SS		1
188	9010280	HDW BEARING, THRUST		1
190	3391737	HDW WASHER,THRUST,17-7 SS		1
192	3395634	DECAL- SIDE, BLACK	*CANNON DECAL*	2
194	3390910	HANDLE-CRANK, MANUAL		1
196	3392707	SPRING, REEL	♦ *TS*	1
198	3396020	BALL BEARING, REEL	♦ *TS*	1
200	3393474	SCREW-DRIVE #14 X .75" SS	♦ *TS*	1
202	3391906	PLATE, CLUTCH REEL	♦ *TS*	1
204	3393418	SCREW-#10-16X.75"HI-LO SS	♦ *TS*	2

▲ *Not shown on Parts Diagram.*
✖ *This part is included in an assembly and cannot be ordered individually.*

✚ *Only one assembly is available with the tournament Cannon Optimum TS.*
♦ *Only available with the Optimum TS series downrigger.*

© 2021 | Johnson Outdoors Marine Electronics, Inc. | cannondownriggers.com

TELESCOPIC BOOM & BOOM END PARTS DIAGRAM

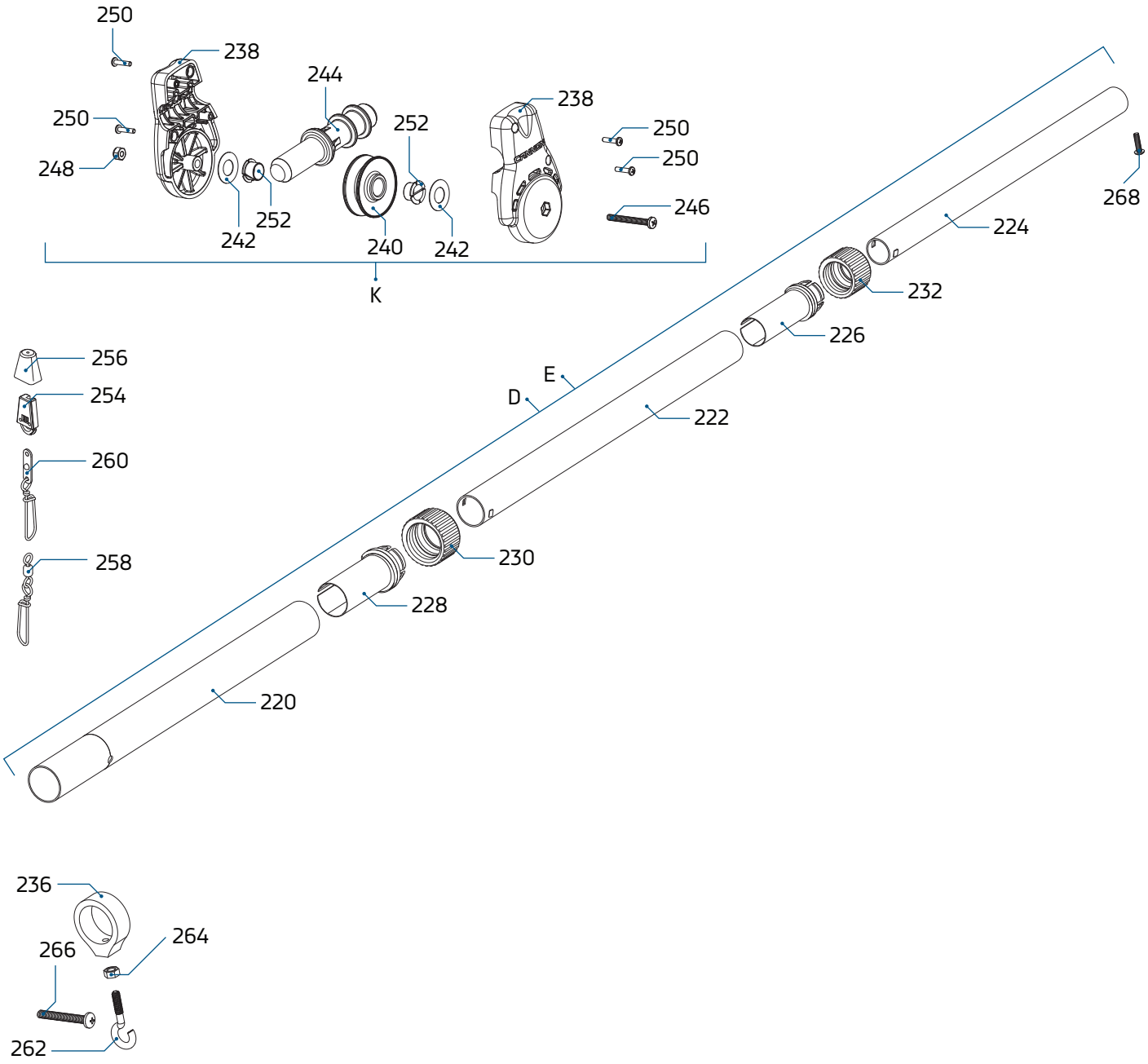

© 2021 | Johnson Outdoors Marine Electronics, Inc. | cannondownriggers.com

TELESCOPIC BOOM & BOOM END PARTS LIST

Assembly	Part #	Description	Notes	Qty.
D	3392010	ASSY, BOOM TELESCOPIC, SS	♦ *TS*	1
E	2210821	ASY BOOM TELESCOPIC		1
K	3990200	ASSY-CNN, BOOM END		1
Item	**Part #**	**Description**	**Notes**	**Qty.**
220	3392001	TUBE, BOOM, BASE, SS	♦ *TS*	1
	2290828	24" BOOM - HEAVY DUTY		1
222	3392002	TUBE, BOOM, MID, SS	♦ *TS*	1
	2290829	ASY TUBE BOOM INTER BLK		1
224	3392003	TUBE, BOOM, END, SS	♦ *TS*	1
	2290830	ASY TUBE BOOM END BLK		1
226	3393301	COLLET - MID TUBE		1
228	3393300	COLLET - BASE TUBE		1
230	2219822	HDW CLAMP BASE TUBE NEW		1
232	2219823	HDW CLAMP INTER TUBE NEW		1
234 ▲	609003	HDW CBL TIE 3 1/2 IN		1
236	3397900	BALL HOOK EXTRUSION		1
238	3392520	CASE, PULLEY		2
240	3392300	SHEEVE, PULLEY		1
242	3391507	SHIM, BOOM END		2
244	3392013	BOOM END, NEW		1
246	3393485	SCREW-#10-24X1.75 PPHMS S		1
248	3393124	NUT-#10-32 NYLOK 18-8 SS RIE		1
250	2303412	SCREW-#6-20 X 5/8 SELF TAP		4
252	3390005	BEARING-NYLINER, #8L5-1/2-F		2
254	9100100	CON TERMINATOR		1
256	9100101	CUSHION SLEEVE TERMINATOR		1
258	9100620	HDW SNAP SWIVEL 4/0-37 MARLIN		1
260	2200148	ASY SNAP & INSULATOR		1
262	9040040	HDW BOLT 1/4-20 ROLLEDTHD HOOK		1
264	2263102	NUT-HEX 1/4-20 SS 300SRS		1
266	3393461	SCREW-1/4-20 x 2" SS, PPH		1
268	2372100	SCREW-#8-18 X 5/8 THD* (SS)		1

▲ *Not shown on Parts Diagram.*
✖ *This part is included in an assembly and cannot be ordered individually.*

✚ *Only one assembly is available with the tournament Cannon Optimum TS.*
♦ *Only available with the Optimum TS series downrigger.*

© 2021 | Johnson Outdoors Marine Electronics, Inc. | cannondownriggers.com

REAR MOUNT ROD HOLDER PARTS DIAGRAM

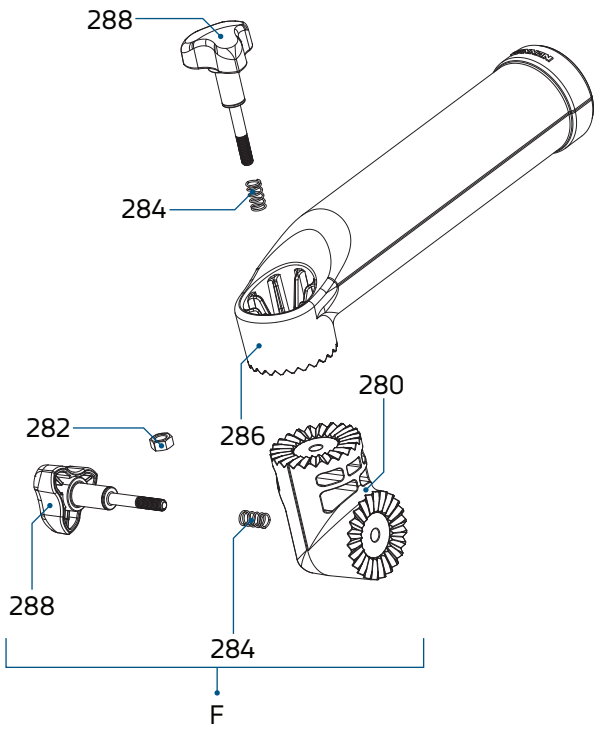

© 2021 | Johnson Outdoors Marine Electronics, Inc. | cannondownriggers.com

REAR MOUNT ROD HOLDER PARTS LIST

Assembly	Part #	Description	Notes	Qty.
F	3991904	ASSY-CNN, ROD HOLDER	✚	1/2
Item	**Part #**	**Description**	**Notes**	**Qty.**
280	3394200	ARM, DUAL AXIS-ROD HLDR		1
282	✖	NUT-HEX 1/4-20 SS RIE COATED		1
284	2287002	HDW SPRING RELEASE PIN		2
286	3392033	TUBE, DUAL AXIS RD HLDR		1
288	3390101	KNOB-CANNON, SOFT GRIP		2

▲ *Not shown on Parts Diagram.*
✖ *This part is included in an assembly and cannot be ordered individually.*

✚ *Only one assembly is available with the tournament Cannon Optimum TS.*
♦ *Only available with the Optimum TS series downrigger.*

RECOMMENDED ACCESSORIES

ROD HOLDERS & TRACK SYSTEMS

Incredible versatile rod holders, rock-solid bases and plates. It's everything you need to rig your boat up to fit the way you fish - and you can mount it all up on our track system, which features interchangeable components made of high-strength aluminum.



Dual Axis Adjustable Rod Holder



Aluminum Mount Track



Swivel Base Pedestal

MOUNTS

Rig it up and reel 'em in with a variety of mounting options suited to fit the way you fish.



Swivel Base



Deck Plate



Gimbal Mount

LINE RELEASES & WEIGHTS

We offer a wide variety of downrigger accessories designed to give you the best fishing experience:



- Uni-Line Release
- Uni-Stacker Release
- 4 to 16 lb. weights

For a complete listing of Cannon accessories, visit cannondownriggers.com

CANNON

cannondownriggers.com

Cannon Consumer & Technical Service
Johnson Outdoors Marine Electronics, Inc.
PO Box 8129
Mankato, MN 56002-8129

121 Power Drive
Mankato, MN 56001
Phone (800) 227-6433
Fax (800) 527-4464

JOHNSON OUTDOORS

©2021 Johnson Outdoors Marine Electronics, Inc.
All rights reserved.

Part #3397137 ECN 42094 Rev D 08/21