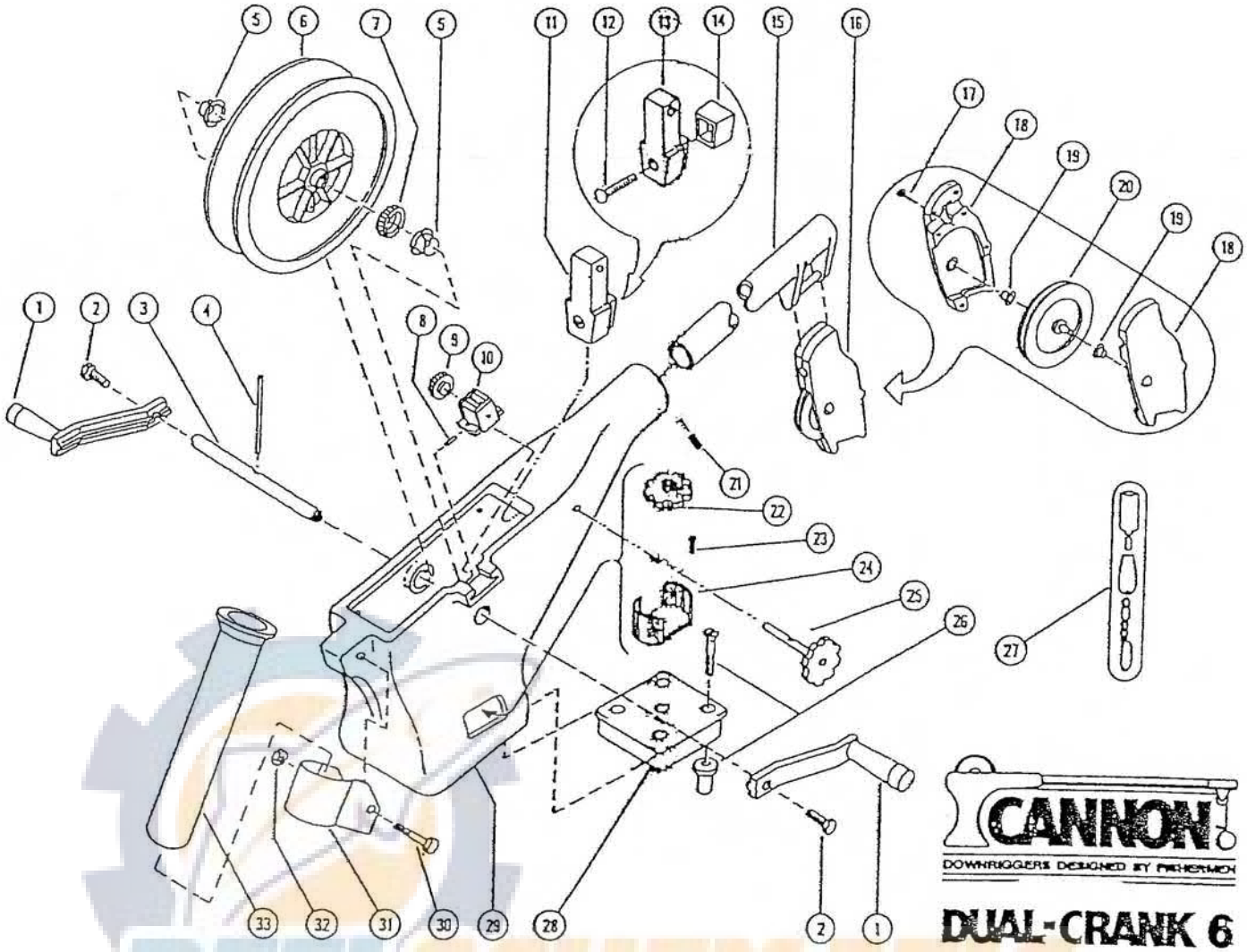

CANNON
DOWNRIGGERS DESIGNED BY FISHERMEN

DUAL-CRANK 6

REEL SCHEMATIC

Key No.	Part Name	Part No.
1.	Crank arm assembly (two needed)	C2199A
2.	Screw—crank arm (two needed)	C2185
3.	Shaft—reel	C2149
4.	Pin—reel shaft	C2164
5.	Bearing—reel shaft (two needed)	C2024
6 & 7	Cable reel assembly	C2300A
7.	Gear only—cable reel	C2026
8.	Tension pad—depth meter	C2255
9.	Gear only—depth meter	C2027
9 & 10.	Depth meter assembly	C2025A
11.	Swing-lock clutch assembly	C2009A
12.	Screw—clutch adjusting	C2011
13.	Body—swing-lock clutch	C2009
14.	Block—clutch adjusting	C2010
15.	Boom—24-inch 48-inch 72-inch	C2036-24 C2036-48 C2036-72
16.	Swivel head assembly	C2043A
17.	Screw—swivel head (six needed)	C2080
18.	Side plates—swivel head (pair)	C2038R-L
19.	Bushing—pulley wheel (two needed)	C2042

Key No.	Part Name	Part No.
20	Pulley wheel—swivel head	C2353
21.	Locking screw	C2051
22.	Wheel and stud—base locking	C2083A
23	Screw—base locking guide (two needed)	C2020
24	Guide—base locking	C2431
25	Knob and shaft assembly—swing lock	C2073A
26	Bolts* (¼-20 x 4") and wellnuts (set of four)	C2068A*
27	Cushion swivel kit	C2191A
28	Base—mounting	C2001A
29	Body—downrigger	C2007
30	Bolt—rod holder clamp (5/16-18 x 1¾")	C2034
31	Clamp—rod holder	C2183
32	Nut—rod holder clamp (5/16-18)	C2240
33	Tube—rod holder	C2033

*Accessory item—not included with unit.

Made in U.S.A.
All Cannon downriggers are covered by U.S. Pat. D-269,992
Copyright 1983, S & K Products, Inc. All rights reserved.

CANNON / S & K Products, Inc.
1732 Glade Street Muskegon, Michigan 49441