FOR SQUARE OR obround

The new positive lock rod holder incorporates a clutch locking disk that allows the rod holder to be adjusted in 15° increments. Slide the clamp to the desired position on tube, being sure angled shoulders are up. Place locking disk into recess of frame and slip the clamp arms in place. Obround hole in clamp must engage obround boss on disk. Slide the star washer between the arm of the clamp and the boss on the frame, insert the bolt with the flat washer on it into the clamp, the disk, the boss, the star washer and the other arm of the clamp. Secure in place with the nut, tighten securely. The rod holder can be repositioned by loosening the nut. It does not have to be disassembled.

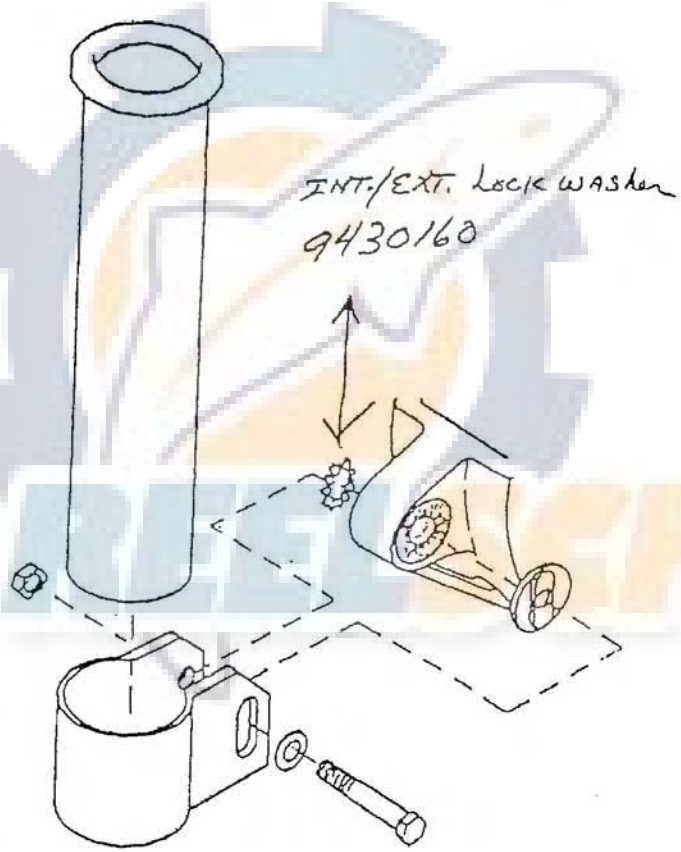

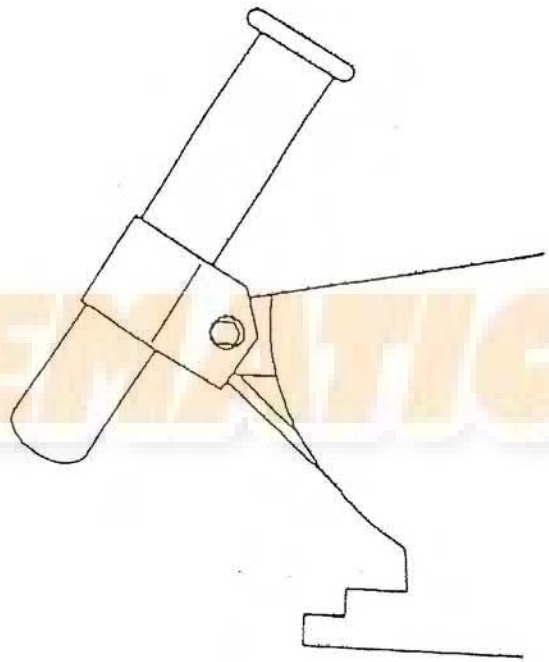

Part# 2261000

COMPONENTS OF ASSEMBLY NOT SHOWN:

2417001	CARTON – MULTI-MOUNT
2452001	LABEL – CARTON
2452002	LABEL – BAR CODE (BASE MOUNT)

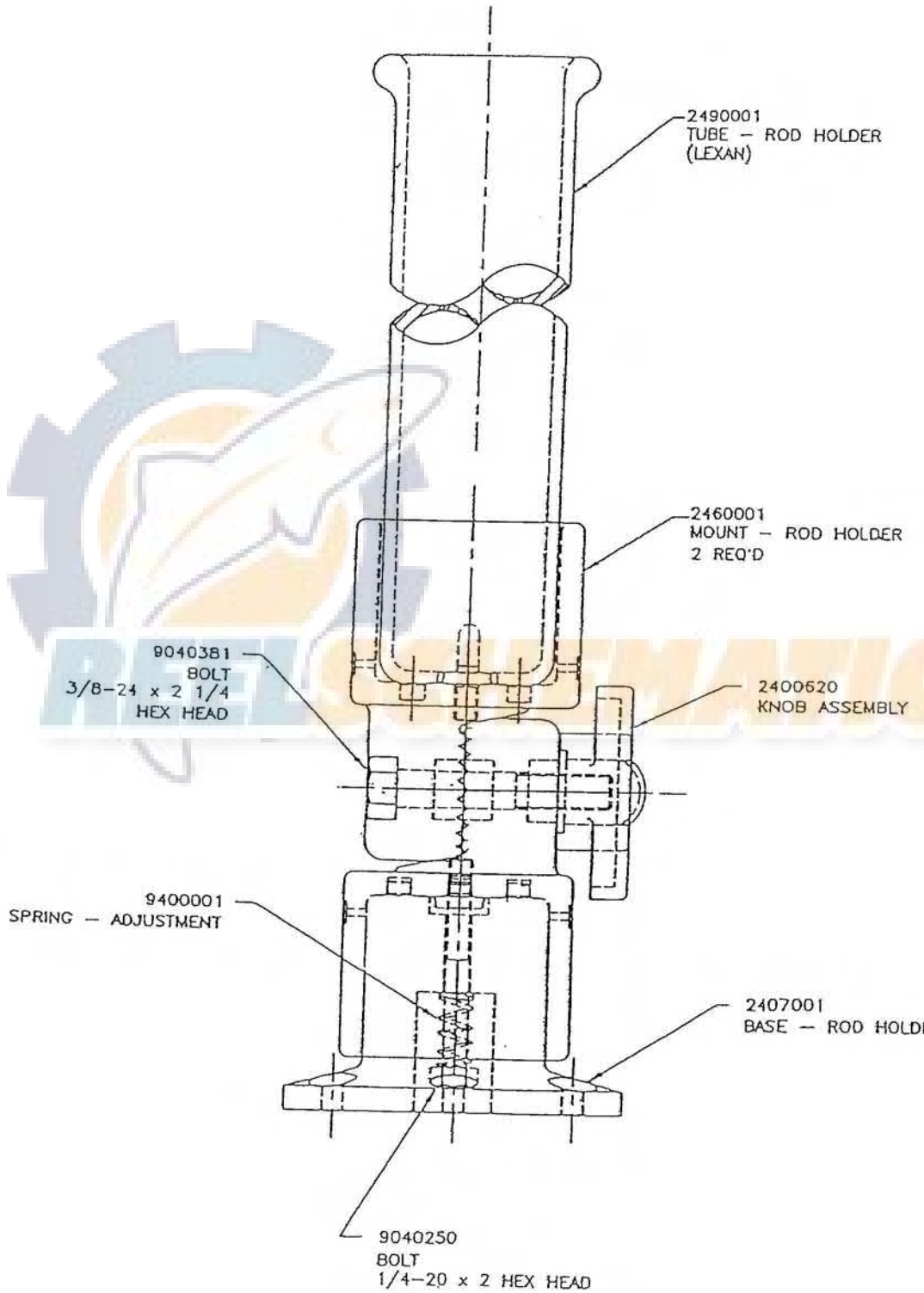

DO NOT SCALE DRAWING	DRAWN BY Linda	CHECKED BY	PART NUMBER 2450002
	DATE 7-25-89	SCALE FULL	DRAWING NUMBER
TOLERANCE UNLESS OTHERWISE SPECIFIED	FRACTIONS ± 1/64	DESCRIPTION ROD HOLDER ASSY. PKG. (BASE MT.)	
	2 PLACE DECIMALS ± .03	USED ON ACCESSORY	
	3 PLACE DECIMALS ± .010	S & K PRODUCTS, INC. MUSKEGON, MICHIGAN	
	4 PLACE DECIMALS ± .0005		
	ANGLES ± 1/2°		