www.reelschematic.com

Daiwa
COMMITTED TO TOTAL QUALITY

# BAITCASTING REEL PT10/15

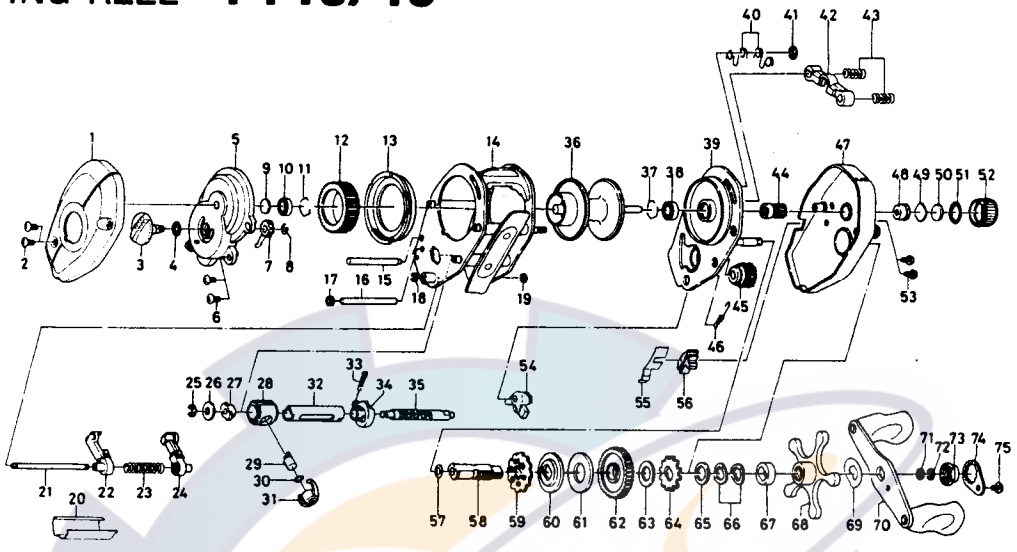

| Key No. | Parts No. | Parts Name | Price Each |
|---|---|---|---|
| 1 | E02-9101 | Left side plate | 8.50 |
| 2 | B36-0401 | Left side plate screw | 0.50 |
| 3 | B98-5001 | Brake adjusting knob | 0.75 |
| 4 | 637-0601 | "O" ring | 0.60 |
| 5 | E03-1201 | Set plate A | 11.75 |
| 6 | B36-0401 | Set plate screw A | 0.50 |
| 7 | B54-1701 | Brake adjusting gear | 1.25 |
| 8 | 320-4202 | Brake adjusting gear retainer | 0.40 |
| 9 | 375-7400 | Spacer | 0.35 |
| 10 | B35-8601 | Ball bearing | 7.80 |
| 11 | B42-1601 | Bearing retainer | 0.40 |
| 12 | B58-2501 | Magnet holder | 10.50 |
| 13 | E03-1601 | Magnet holder collar | 0.50 |
| 14 | E02-9601 | Frame | 21.95 |
| 15 | E03-1401 | Stabilizer bar A | 0.75 |
| 16 | B98-7101 | Stabilizer bar B | 4.60 |
| 17 | B98-4501 | Stabilizer bar collar | 0.35 |
| 18 | B86-4101 | Stabilizer bar retainer | 0.35 |
| 19 | B86-4101 | Stabilizer bar retainer | 0.35 |
| 20 | B98-7201 | Line guard | 17.35 |
| 21 | B86-3501 | Stabilizer bar C | 1.05 |
| 22 | B98-6901 | Line guide A | 3.65 |
| 23 | B86-3601 | Line guide spring | 0.50 |
| 24 | B98-6601 | Line guide B | 3.65 |
| 25 | 320-5901 | Worm shaft retainer | 0.40 |
| 26 | 376-1801 | Worm shaft holder washer | 0.40 |
| 27 | 022-2201 | Worm bearing A | 0.55 |
| 28 | B98-7301 | Line guide pawl holder | 1.50 |
| 29 | B98-7601 | Line guide pawl | 0.55 |
| 30 | 375-4100 | Line guide washer | 0.40 |
| 31 | B98-7701 | Pawl cap | 0.75 |
| 32 | B98-8501 | Level wind guard | 2.05 |
| 33 | B98-7801 | Worm bearing spring | 2.05 |
| 34 | B98-7501 | Worm bearing B | 0.45 |
| 35 | B98-7401 | Worm shaft | 5.50 |
| 36 | E01-8501 | Spool | 15.00 |
| 37 | B42-1601 | Bearing retainer | 0.40 |
| 38 | B35-8601 | Ball bearing | 7.80 |
| 39 | E02-0001 | Set plate B | 13.75 |
| 40 | B81-5503 | Set plate spring | 0.40 |
| 41 | 320-1402 | Clutch ret. ring | 0.40 |
| 42 | B35-9001 | Yoke | 0.75 |
| 43 | 144-7101 | Yoke spring | 0.50 |
| 44 | B87-0901 | Pinion gear | 7.65 |
| 45 | B98-4301 | Worm shaft gear | 0.75 |
| 46 | B35-8901 | Anti-reverse pawl spring | 0.50 |
| 47 | E01-9901 | Right side plate | 12.80 |
| 48 | B64-3101 | Bush | 0.60 |
| 49 | B17-5401 | Spool adjusting cap metal | 0.40 |
| 50 | B17-5501 | Spacer | 0.40 |
| 51 | 171-5201 | "O" ring | 0.55 |
| 52 | B35-7306 | Cast control cap | 1.55 |
| 53 | B36-0401 | Set plate screw B | 0.50 |
| 54 | B74-0501 | Anti-reverse pawl | 1.10 |
| 55 | E01-7101 | Anti-reverse lever spring | 0.45 |
| 56 | E01-7001 | Anti-reverse lever | 0.45 |
| 57 | 373-7611 | Drive shaft washer A | 0.40 |
| 58 | B35-9602 | Drive shaft | 2.10 |
| 59 | B86-5101 | Anti-reverse ratchet | 1.10 |
| 60 | B85-4801 | Drive shaft washer B | 0.60 |
| 61 | B36-0202 | Drag washer A | 0.50 |
| 62 | E02-3901 | Drive gear | 11.75 |
| 63 | 375-7101 | Drag washer B | 0.35 |
| 64 | E01-7502 | Key washer | 0.35 |
| 65 | 373-7800 | Drag washer C | 0.35 |
| 66 | 150-8901 | Drag spring washer | 0.40 |
| 67 | 634-5801 | Spacing sleeve | 0.40 |
| 68 | E02-8901 | Star drag | 5.30 |
| 69 | 150-9001 | Friction washer | 0.40 |
| 70 | E02-9001 | Handle assembly | 6.15 |
| 71 | B41-1701 | Drive shaft washer C | 0.40 |
| 72 | 320-8202 | Drive shaft retainer | 0.35 |
| 73 | 341-5801 | Handle nut | 0.90 |
| 74 | 040-3204 | Handle nut plate | 0.55 |
| 75 | 353-8301 | Handle nut plate screw | 0.50 |
| **PT15 Special Parts** | | | |
| 14 | E02-9701 | Frame | 22.00 |
| 15 | E03-1501 | Stabilizer bar A | 0.90 |
| 16 | B98-9001 | Stabilizer bar B | 3.25 |
| 20 | B98-9101 | Line guard | 17.50 |
| 21 | B98-8901 | Stabilizer bar C | 0.95 |
| 23 | B92-7201 | Line guide spring | 0.40 |
| 32 | B98-8601 | Level wind guard | 2.10 |
| 35 | B98-9201 | Worm shaft | 6.30 |
| 36 | E02-0601 | Spool | 15.00 |
| 47 | E01-9902 | Right side plate | 15.70 |