www.reelschematic.com

Daiwa
COMMITTED TO TOTAL QUALITY

Please order by part number, not key number.

SPINNING REEL EMBLEM-Z3500i/4000i

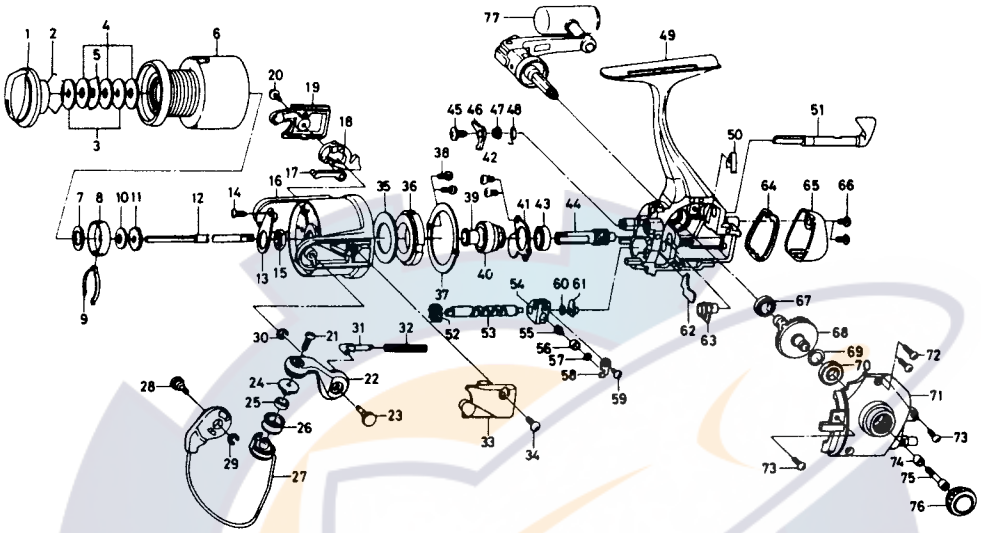

Key No.	Parts No.	Parts Name
2-6	F31-8201	Spool assembly
1	F20-4603	Drag knob
2	170-4101	Drag washer retainer
3	E27-7801	Key washer
4	B36-0204	Drag washer
5	372-3832	Eared washer
6	F31-8301	Spool assembly
7	E39-7901	Spool washer
8	E12-2302	Click leaf spring holder
9	B74-7702	Spool click leaf spring
10	375-4202	Main shaft washer
11	E41-3101	Click gear
12	F18-5801	Main shaft
13	F18-9601	Rotor nut holding plate
14	B93-3001	Rotor nut holding plate screw
15	B10-5701	Rotor nut
16	F31-7301	Rotor
17	F08-0702	Bail trip plate
18	F01-4401	Bail trip lever
19	F18-2808	Bail trip cover
20	E33-0402	Bail trip cover screw
21	B67-9306	Line roller screw
22	F17-6506	Bail arm
23	F15-2501	Bail arm screw
24	F06-6301	Line roller collar
25	F05-5601	Ball bearing A
26	F31-4701	Line roller
27	F31-7401	Bail assembly
28	F15-2501	Bail trip cam screw
29	320-5901	Bail trip cam screw retainer
30	320-5901	Bail arm screw retainer
31	F24-6801	Bail spring shaft
32	E39-0601	Bail spring
33	F18-2508	Bail spring cover
34	E24-8101	Bail spring cover screw
35	F19-7302	Oiled washer
36	F18-2901	Roller clutch
37	F18-3001	Roller clutch retainer
38	E15-7502	Roller clutch retainer screw
39	F18-1301	Spacing sleeve
40	F18-1401	Anti-reverse ratchet
41	F18-1201	Bearing retainer
42	B83-4402	Bearing retainer screw
43	635-4801	Ball bearing B
44	F26-5101	Pinion gear
45	L00-1801	Anti-reverse pawl screw
46	F18-1801	Anti-reverse pawl
47	F18-1701	Anti-reverse pawl collar
48	F37-4501	Anti-reverse pawl spring
49	F31-7201	Body assembly
50	E32-7801	Anti-reverse cam spring
51	F18-1007	Anti-reverse lever
52	E42-0501	Worm shaft gear
53	F30-7802	Worm shaft
54	E37-6301	Oscillating slider
55	E19-1202	Oscillating pawl
56	E19-1301	Oscillating pawl bush
57	375-0801	Oscillating pawl washer
58	E37-6901	Oscillating slider cover
59	E40-1501	Oscillating slider cover screw
60	B53-6102	Worm shaft washer
61	F05-6901	Worm shaft collar
62	E48-2801	Shield plate
63	E48-2701	Pinion collar
64	F18-3406	Water shield
65	F18-3506	Rear cover
66	E36-4202	Rear cover screw
67	B86-1701	Ball bearing C
68	E41-8603	Drive gear
69	373-7802	Drive qear washer
70	E15-4001	Ball bearing D
71	F18-2304	Side cover
72	E15-8602	Side cover screw A
73	E15-7502	Side cover screw B
74	F18-3701	Handle collar
75	F38-7101	Handle screw
76	F18-3903	Handle screw cap
77	F31-7501	Handle assembly
Z4000i Special parts		
2-6	F31-8601	Spool assembly
6	F31-8701	Spool assembly
16	F31-8401	Rotor
27	F31-8501	Bail assembly