DAIWA

SPINNING REEL

FEGLT4000_5000D-C

*Please order by parts number, not key number.

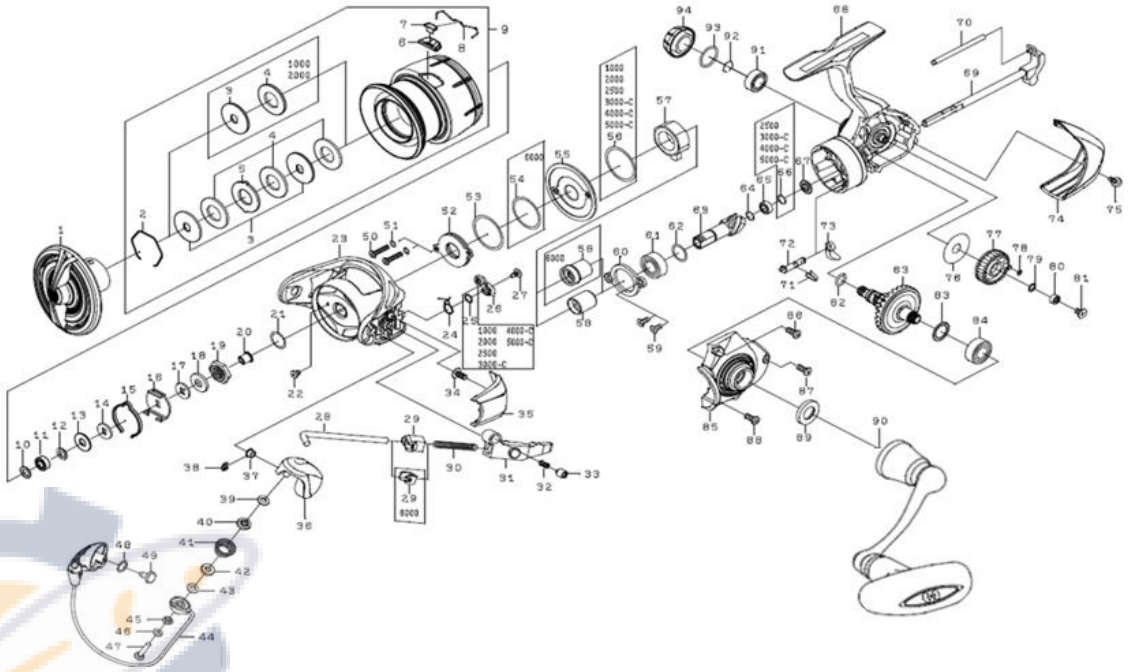

Key No	Part No	Description
1	Q35-2901	DRAG KNOB
2	Q34-6101	DRAG WASHER RETAINER
3	Q62-1901	KEY WASHER
4	Q91-7601	ATD DRAG WASHER (3PCS/PK)
5	Q34-6001	EARED WASHER
6	Q35-3501	LINE STOPPER PLATE
7	Q34-5501	LINE STOPPER
8	Q34-5701	LINE STOPPER SPRING
9	Q93-9301	SPOOL ASSY
10	Q38-2701	SPOOL BEARING WASHER (A)
11	E33-2501	SPOOL BALL BEARING
12	B41-1706	SPOOL BEARING WASHER (B)
13	E39-8003	SPOOL WASHER (A)
14	Q34-8502	SPOOL WASHER (B)
15	Q79-7701	CLICK LEAF SPRING
16	Q79-8201	CLICK SPRING HOLDER
17	Q34-4001	SPOOL WASHER (C)
18	H98-6901	ROTOR NUT PACKING
19	Q73-5801	ROTOR NUT
20	Q85-8101	ROTOR NUT COLLAR
21	372-7602	ROTOR NUT WASHER
22	H02-2701	ROTOR NUT SCREW
23	Q86-5201	ROTOR
24	Q81-0801	BAIL TRIP LEVER SPRING
25	M19-4601	BAIL TRIP LEVER WASHER
26	Q83-2801	BAIL TRIP LEVER
27	Q95-7301	BAIL TRIP LEVER SCREW
28	Q83-3001	BAIL SPRING SHAFT
29	Q80-8501	BAIL SPRING SHAFT COLLAR
30	Q83-3201	BAIL SPRING
31	Q83-3301	BAIL SPRING HOLDER
32	Q81-2001	BAIL CLICK SPRING
33	Q80-8701	BAIL CLICK PIN
34	Q81-2201	BAIL SPRING COVER SCREW
35	Q83-3701	BAIL SPRING COVER
36	Q83-3602	BAIL ARM
37	Q80-9101	BAIL ARM COLLAR
38	B33-9801	BAIL ARM RETAINER
39	Q81-0001	ROLLER COLLAR (A)
40	Q80-9901	ROLLER COLLAR (B)
41	Q80-9803	LINE ROLLER
42	Q80-9901	ROLLER COLLAR (C)
43	Q81-0101	ROLLER WASHER
44	Q86-5701	BAIL
45	Q80-9701	ROLLER SCREW COLLAR
46	373-1306	ROLLER SCREW WASHER
47	M39-8901	ROLLER SCREW
48	Q41-6203	BAIL HOLDER WASHER
49	Q81-2301	BAIL HOLDER SCREW
50	G83-7101	MAGSEALED PLATE SCREW
51	375-4102	MAGSEALED PLATE SCREW WASHER
52	J68-8201	MAGSEALED PLATE
53	J35-4801	MAGSEALED PLATE O RING
54	--------	----------
55	Q26-6601	MAGSEALED COVER
56	J63-9901	ONEWAY CLUTCH WASHER
57	J38-8401	ONEWAY CLUTCH
58	J00-1403	CLUTCH RING
59	Q12-6201	PINION BEARING PLATE SCREW
60	Q19-5601	PINION BEARING PLATE
61	G46-7302	PINION BALL BEARING (A)
62	375-8502	PINION BEARING WASHER (A)
63	Z70-0923	PINION DRIVE GEAR SET
64	H93-1701	PINION SPRING WASHER
65	G46-6202	PINION BALL BEARING (B)
66	G46-6103	PINION BEARING WASHER (B)
67	J38-7701	PINION COLLAR
68	Q86-4201	BODY
69	Q86-4601	MAIN SHAFT
70	Q85-3002	OSCILLATING POST
71	Q84-5901	ANTI REVERSE CAM SPRING
72	Q85-2701	ANTI REVERSE CAM
73	Q85-2601	ANTI REVERSE LEVER
74	Q86-5101	REAR COVER
75	Q34-2901	REAR COVER SCREW
76	H59-5701	OSCILLATING GEAR WASHER
77	Q35-0901	OSCILLATING GEAR
78	G46-6001	OSCILLATING GEAR O RING
79	H12-9201	OSCILLATING GEAR BEARING WASHER
80	G46-9005	OSCILLATING GEAR BALL BEARING
81	Q12-6101	OSCILLATING GEAR SCREW
82	G67-0501	DRIVE GEAR O RING
83	375-8502	DRIVE WASHER
84	G46-7302	DRIVE BALL BEARING (A)
85	Q86-4901	SIDE COVER
86	Q34-2601	SIDE COVER SCREW (A)
87	Q34-2701	SIDE COVER SCREW (B)
88	Q85-2401	SIDE COVER SCREW (C)
89	J10-0201	SIDE COVER PACKING
90	Q86-5801	HANDLE ASSY
91	G52-2706	DRIVE BALL BEARING (B)
92	G47-2401	DRIVE BEARING RETAINER
93	G16-2401	HANDLE CAP O RING
94	Q34-5101	HANDLE CAP

FEGLT5000D-C Special Parts

Key No	Part No	Description
1	Q35-2901	DRAG KNOB
9	Q93-9101	SPOOL ASSY