www.reelschematic.com

Daiwa
COMMITTED TO TOTAL QUALITY
SPINNING REEL

Please order by part number, not key number

JUPITER-Z1505T

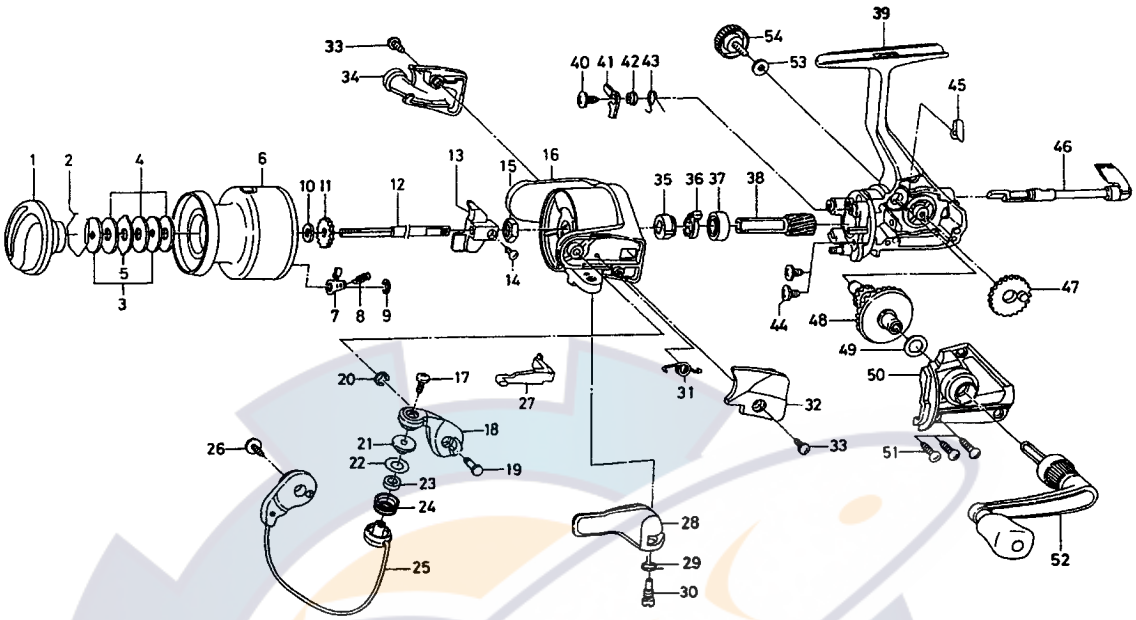

Key No.	Parts No.	Parts Name
2-9	F61-4101	SPOOL
1	F32-8504	DRAG KNOB
2	F37-3301	DRAG WASHER RET
3	E46-7201	KEY WASHER
4	E13-6001	DRAG WASHER
5	373-3603	EARED WASHER
7	B07-5304	CLICK PAWL
8	E40-3101	CLICK SPRING
9	320-5901	CLICK RET
10	E46-7101	SPOOL WASHER
11	270-6501	CLICK GEAR
12	F46-0801	MAIN SHAFT
13	F12-2301	OSC SLIDER
14	351-0311	OSC SLIDER SCREW
15	341-9201	ROTOR NUT
16	F32-1409	ROTOR
17	B67-9308	LINE ROLLER SCREW
18	F47-3801	BAIL ARM
19	E49-3501	BAIL ARM SCREW
20	320-5901	BAIL ARM SCREW RET
21	F44-6302	LINE ROLLER COLLAR
22	F44-6202	LINE ROLLER WASHER
23	F47-3401	LINE ROLLER BUSHING
24	F45-4901	LINE ROLLER
25	F62-0201	BAIL
26	B84-2102	BAIL HOLDER SCREW
27	E49-6401	BAIL TRIP LEVER

Key No.	Parts No.	Parts Name
28	E49-3410	TRIGGER LEVER
29	E36-9901	TRIGGER SPRING
30	E37-0002	TRIGGER SCREW
31	E49-6801	BAIL SPRING
32	F32-4104	BAIL SPRING COVER
33	E24-8101	BAIL SPRING COVER SCREW
34	F32-6504	BAIL TRIP COVER
35	F12-2101	SPRING HOLDER
36	E49-8501	A/R RATCHET
37	634-1301	BALL BEARING
38	F12-1601	PINION GEAR
39	F61-3702	BODY
40	F12-5701	A/R PAWL SCREW
41	F12-1901	A/R PAWL
42	F12-3501	A/R PAWL COLLAR
43	F12-3401	A/R PAWL SPRING
44	E03-7801	BEARING RET SCREW
45	F12-2001	A/R CAM SPRING
46	F08-5128	A/R LEVER
47	F12-2201	OSC GEAR
48	F12-1501	DRIVE GEAR
49	375-8502	DRIVE GEAR WASHER
50	F61-3802	SIDE COVER
51	E15-8602	SIDE COVER SCREW
52	E49-7402	HANDLE
53	F02-0202	HANDLE LOCK WASHER
54	F67-6502	HANDLE LOCK SCREW