www.reelschematic.com

Daiwa
COMMITTED TO TOTAL QUALITY

Please order by part number, not key number

SPINNING REEL

JUPITER-Z5500 / 6000

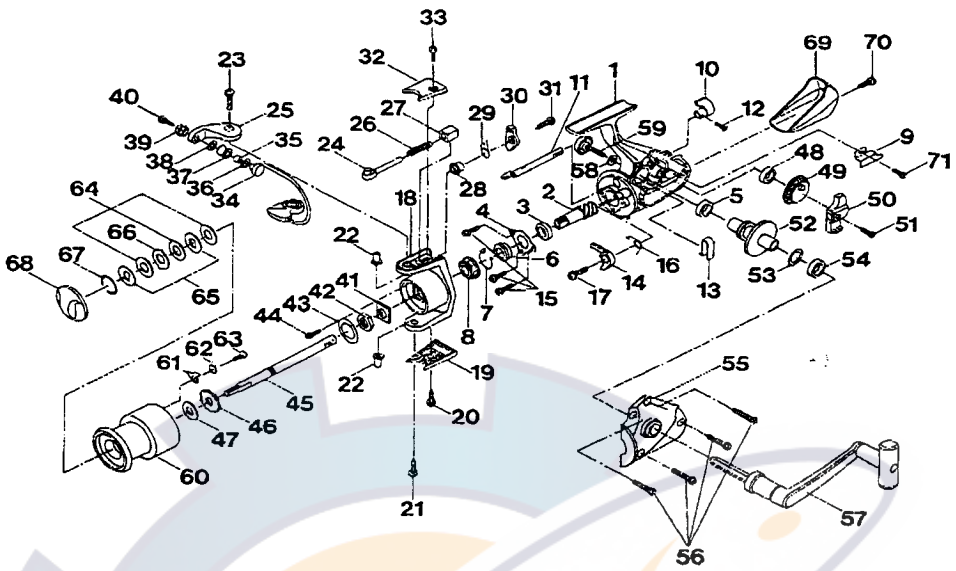

Key No.	Parts No.	Parts Name
1	W30-4701	BODY
2	W30-8801	PINION GEAR
3	W30-1501	BALL BEARING D
4	W30-1601	BEARING RET
5	W30-3601	BALL BEARING C
6	W30-7801	SPRING HOLDER
7	W30-7701	A/R PAWL SPRING B
8	W30-7601	A/R RATCHET
9	W30-5001	OSC SLIDER HOLDING PLT
10	W30-7001	A/R LEVER
11	W30-7901	A/R CAM
12	W30-8101	A/R LEVER SCREW
13	W30-7201	A/R CAM SPRING
14	W30-7301	A/R PAWL
15	W30-9501	BEARING RET SCREW
16	W30-7501	A/R PAWL SPRING
17	W30-7401	A/R PAWL SCREW
18	W30-8501	ROTOR
19	W31-1201	BAIL TRIP COVER
20	W30-2701	BAIL TRIP COVER SCREW
21	W31-1001	BAIL HOLDER SCREW
22	W30-1801	BAIL HOLDER COLLAR
23	W30-1701	BAIL ARM SCREW
24	W31-2201	BAIL SPRING SHAFT
25	W30-1001	BAIL ARM
26	W30-9101	BAIL SPRING
27	W31-2301	BAIL SPRING HOLDER
28	W31-2001	BAIL TRIP LEVER COLLAR
29	W31-1701	BAIL TRIP LEVER SPRING
30	W31-2501	BAIL TRIP LEVER
31	W31-1601	BAIL TRIP LEVER SCREW
32	W30-1201	BAIL SPRING COVER
33	W30-2701	BAIL SPRING COVER SCREW
34	W30-0501	BAIL
35	W30-6001	BALL BEARING B
36	W30-6101	LINE ROLLER WASHER A
37	W30-6901	LINE ROLLER
38	W30-6201	LINE ROLLER WASHER B
39	W31-2401	BAIL ARM COLLAR
40	W30-5801	LINE ROLLER SCREW
41	W30-8201	ROTOR NUT HOLD PLT
42	W30-8701	ROTOR NUT
43	W30-6501	ROTOR NUT WASHER
44	W30-6301	ROTOR NUT LOCK SCREW
45	W30-6601	MAIN SHAFT
46	W30-2001	CLICK GEAR
47	W30-6801	SPOOL WASHER
48	W30-5601	OSC GEAR COLLAR
49	W30-5501	OSC GEAR
50	W30-5201	OSC SLIDER
51	W30-5101	OSC SLIDER SCREW
52	W30-3301	DRIVE GEAR
53	W30-4301	DRIVE GEAR WASHER
54	W30-4001	BALL BEARING A
55	W30-2401	SIDE COVER
56	W30-2601	SIDE COVER SCREW
57	W30-2901	HANDLE
58	W30-6401	HANDLE LOCK SCREW WASHER
59	W30-3001	HANDLE LOCK SCREW
60	W30-9901	SPOOL
60	W31-0801	SPOOL (EXTRA)
61	W30-1901	CLICK PAWL
62	W30-2101	CLICK SPRING
63	W30-2301	CLICK PAWL SCREW
64	W30-3201	DRAG WASHER
65	W30-4801	KEY WASHER
66	W30-4501	EARED WASHER
67	W30-9601	DRAG WASHER RET
68	W30-3101	DRAG KNOB
69	W30-9301	REAR COVER
70	W30-9401	REAR COVER SCREW
71	W30-4901	OSC SLIDER HOLD PLT SCREW

J-Z6000 Special Parts

Key No.	Parts No.	Parts Name
18	W30-8601	ROTOR
30	W31-1401	BAIL TRIP LEVER
32	W30-1101	BAIL SPRING COVER
34	W30-0701	BAIL
60	W31-0001	SPOOL
60	W31-0901	SPOOL (EXTRA)