www.reelschematic.com

Daiwa
COMMITTED TO TOTAL QUALITY

*Please order by part number, not key number.*

# SPINING REEL REGAL-S1505B

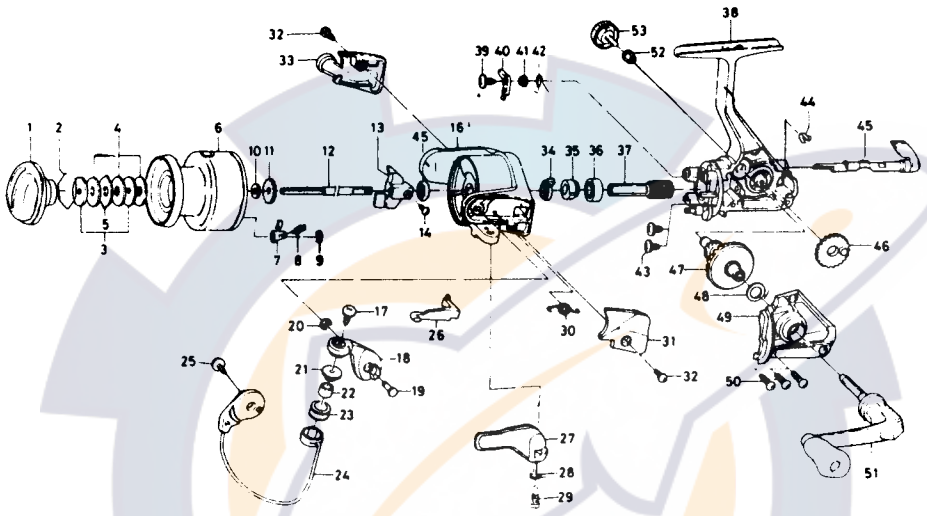

| Key NO. | Parts No. | Parts Name |
|---|---|---|
| 2-9 | F33-0101 | Spool assembly |
| 1 | F32-8501 | Drag knob |
| 2 | F37-3301 | Drag washer retainer |
| 3 | E46-7201 | Key washer |
| 4 | E13-6001 | Drag washer |
| 5 | 373-3603 | Eared washer |
| 6 | F33-0201 | Spool assembly |
| 7 | B07-5304 | Click pawl |
| 8 | E40-3101 | Click spring |
| 9 | 320-5901 | Click retainer |
| 10 | E46-7101 | Spoolwasher |
| 11 | 270-6501 | Click gear |
| 12 | E49-8401 | Main shaft |
| 13 | F12-2301 | Oscillating slider |
| 14 | 351-0311 | Oscillating slider screw |
| 15 | 341-9201 | Rotor nut |
| 16 | F33-1401 | Rotor |
| 17 | B67-9306 | Line roller screw |
| 18 | F17-3102 | Bail arm |
| 19 | E49-3501 | Bail arm screw |
| 20 | 320-5901 | Bail arm screw retainer |
| 21 | F06-6301 | Line roller collar |
| 22 | F31-6801 | Line roller bushing |
| 23 | E50-6001 | Line roller |
| 24 | F33-1501 | Bail assembly |
| 25 | B84-2102 | Bail trip cam screw |
| 26 | E49-6401 | Bail trip lever |

| Key NO. | Parts No. | Parts Name |
|---|---|---|
| 27 | E49-3406 | Trigger lever |
| 28 | E36-9901 | Trigger spring |
| 29 | E37-0002 | Trigger screw |
| 30 | E49-6801 | Bail spring |
| 31 | F32-4101 | Bail spring cover |
| 32 | E24-8101 | Bail spring cover screw |
| 33 | F32-6501 | Bail trip cover |
| 34 | F12-2101 | Anti-reverse pawl spring A |
| 35 | E49-8501 | Anti-reverse ratchet |
| 36 | 634-1301 | Ball bearing |
| 37 | F12-1601 | Pinion gear |
| 38 | F33-0002 | Body assembly |
| 39 | F12-5701 | Anti-reverse pawl screw |
| 40 | F12-1901 | Anti-reverse pawl |
| 41 | F12-3501 | Anti-reverse pawl collar |
| 42 | F12-3401 | Anti-reverse pawl spring B |
| 43 | E03-7801 | Bearing retainer screw |
| 44 | F12-2001 | Anti-reverse cam spring |
| 45 | F08-5122 | Anti-reverse lever |
| 46 | F12-2201 | Oscillating gear |
| 47 | F12-1501 | Drive gear |
| 48 | 375-8501 | Drive gear washer |
| 49 | F32-7602 | Side cover |
| 50 | E15-8602 | Side cover screw |
| 51 | F32-8201 | Handle assembly |
| 52 | 501-8501 | Handle collar |
| 53 | B92-5004 | Handle lock screw |