Please quote by part number, not key number when ordering
spares@daiwaaustralia.com.au PH: 02 8644 8644

2015 SALTIGA DOGFIGHT 8000

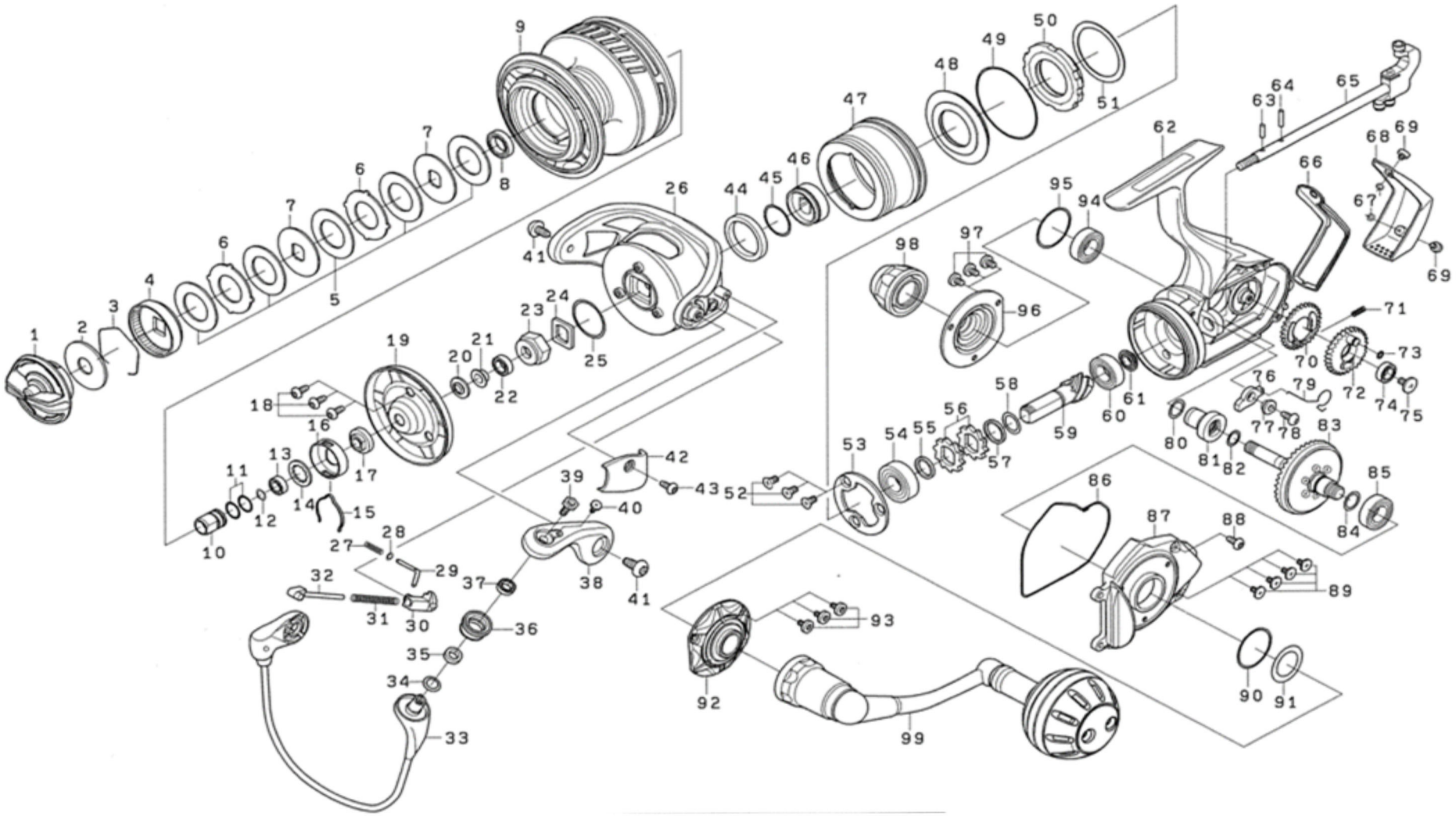

Please quote by part number, not key number when ordering

spares@daiwaaustralia.com.au PH: 02 8644 8644

2015 SALTIGA DOGFIGHT 8000

Key No.	Part Number	Description	Key No.	Part Number	Description
1	6J216701	DRAG KNOB	50	6F765401	ROLLOR CLUTCH
2	6H616701	DRAG WASHER (A)	51	6G158101	WASHER (E)
3	6F710001	DRAG WASHER RETAINER	52	6F206902	SCREW (F)
4	6G165603	DRAG KNOB CLICK PLATE	53	6H501901	BEARING RETAINER
5	6H247202	ATD DRAG WASHER	54	6G426301	BALL BEARING (E)
6	6G165902	EARED WASHER	55	6H683501	COLLAR (D)
7	6G162702	KEY WASHER	56	6E262701	RATCHET
8	6G156801	BALL BEARING (A)	57	63727603	WASHER (F)
9	6J216801	SPOOL ASSEMBLY	58	63727601	WASHER (G)
10	6G339202	SPOOL METAL (A)	59+83	6Z022183	PINION + DRIVE GEAR UNIT
11	6G339401	"O"RING (A)	60	6B861703	BALL BEARING (F)
12	6G339101	"O"RING (B)	61	6H683001	COLLAR (E)
13	6G314901	BALL BEARING (B)	62	6J233501	BODY
14	6G341500	WASHER (A)	63	6G339301	PIN (A)
15	6G341401	SPOOL CLICK LEAF SPRING	64	6G338901	PIN (B)
16	6G341301	CLICK LEAF SPRING HOLDER	65	6J188901	MAIN SHAFT
17	6G339001	SPOOL METAL (B)	66	6H684301	PACKING (B)
18	6H503901	SCREW (A)	67	6G684801	WASHER (H)
19	6H685701	COLLAR (A)	68	6H684404	REAR COVER
20	6H685601	PACKING (A)	69	6G946802	SCREW (G)
21	6H685501	COLLAR (B)	70	6G334901	OSCILLATING GEAR (A)
22	6B861702	BALL BEARING (C)	71	6G157401	OSCILLATING GEAR SPRING
23	6H685402	ROTOR NUT	72	6H682601	OSCILLATING GEAR (B)
24	6H685301	ROTOR NUT PLATE	73	6G213001	"O"RING (F)
25	6F274501	"O"RING (C)	74	6B861702	BALL BEARING (G)
26	6H684504	ROTOR	75	6H347101	SCREW (H)
27	6H782801	BAIL SPRING (A)	76	6H683601	ANTI-REVERSE PAWL ASSEMBLY
28	6E272501	WASHER (B)	77	6G336201	COLLAR (F)
29	6H684601	BAIL SPRING SHAFT (A)	78	63516413	SCREW (I)
30	6H684701	BAIL SPRING HOLDER	79	6G336601	SPRING
31	6G418101	BAIL SPRING (B)	80	6G339401	"O"RING (G)
32	6G337301	BAIL SPRING SHAFT (B)	81	6G334703	IDLE GEAR
33	6H876901	BAIL ASSEMBLY	82	6G336701	"O"RING (H)
34	6E096500	WASHER (C)	59+83	6Z022183	PINION + DRIVE GEAR UNIT
35	6J042801	COLLAR (C)	84	6G339401	"O"RING (I)
36	6J042902	LINE ROLLER	85	6J048701	BALL BEARING (H)
37	6J019302	BALL BEARING (D)	86	6H683901	PACKING (C)
38	6H503606	BAIL ARM	87	6H683811	SIDE COVER
39	6H504703	SCREW (B)	88	6G160106	SCREW (J)
40	6H842801	SCREW (C)	89	6H505201	SCREW (K)
41	6H503702	SCREW (D)	90	6J048601	"O"RING (J)
42	6H684801	COVER (A)	91	6H502200	WASHER (I)
43	6H503902	SCREW (E)	92	6J048802	DRIVE BEARING RETAINER (A)
44	6H687201	WASHER (D)	93	6G946802	SCREW (L)
45	6G338401	"O"RING (D)	94	6J048701	BALL BEARING (I)
46	6H688601	SPACING SLEEVE	95	6J048601	"O"RING (K)
47	6J216201	COVER (B)	96	6J048802	DRIVE BEARING RETAINER (B)
48	6H535301	MAGNET ASSEMBLY	97	6G946802	SCREW (M)
49	6H502601	"O"RING (E)	98	6H686303	HANDLE SCREW CAP
			99	6J216301	HANDLE ASSEMBLY