www.reelschematic.com

Daiwa
ENGINEERED TACKLE

SPINCASTING REEL 2100A

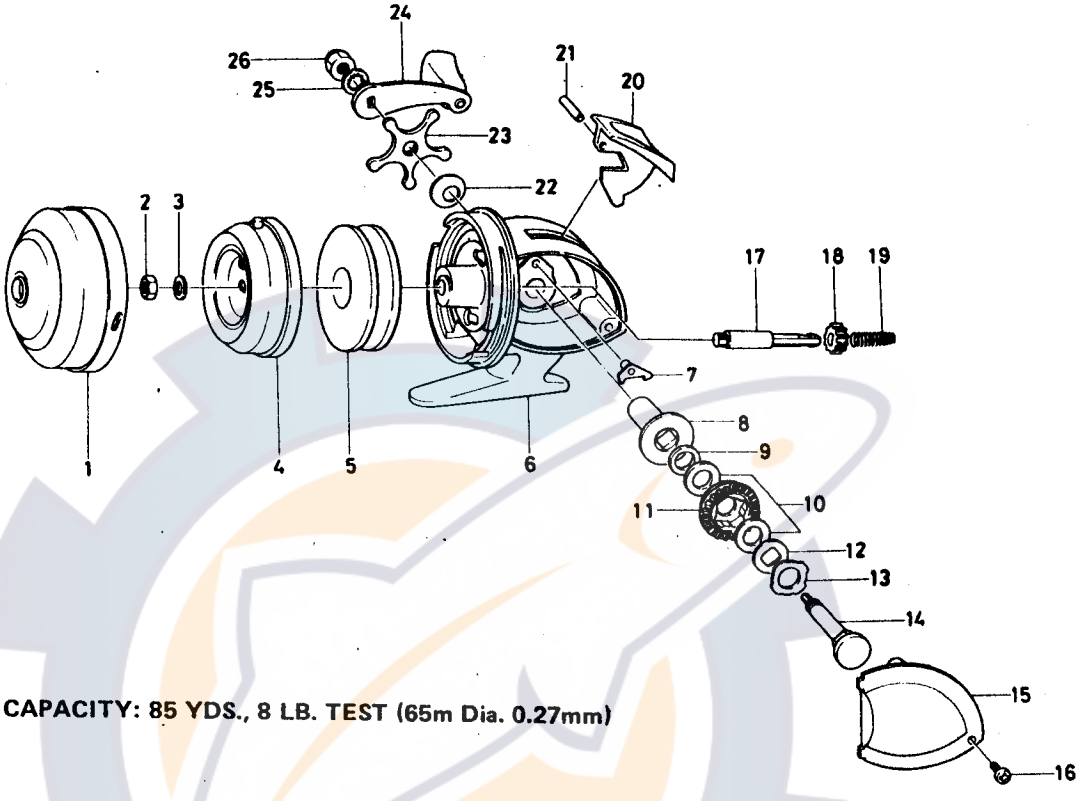

SPOOL LINE CAPACITY: 85 YDS., 8 LB. TEST (65m Dia. 0.27mm)

Key No.	Parts No.	Parts Name
1	60082911	Front cover
2	64505111	Rotor nut
3	63700226	Rotor nut washer
4	60082811	Rotor
5	65121611	Spool
6	61915711	Body
7	67700501	Anti-reverse claw
8	63814101	Gear shaft metal
9	63730100	Drive gear washer
10	63733211	Drag washer A
11	64120301	Drive gear
12	63733101	Drag washer B
13	63733011	Drag washer C

Key No.	Parts No.	Parts Name
14	64217301	Drive gear shaft
15	60618611	Body cover
16	63521801	Body cover screw
17	63919011	Main shaft
18	64003211	Pinion
19	61401512	Main shaft spring
20	62906911	Push button
21	61212901	Push button pin
22	61508101	Star drag spring washer
23	65501712	Star drag
24	67457901	Handle
25	61602801	Handle washer
26	63409313	Handle nut