www.reelschematic.com

Daiwa
NUMBER 1 IN THE WORLD • BY DESIGN

SPINCASTING REEL 2100B

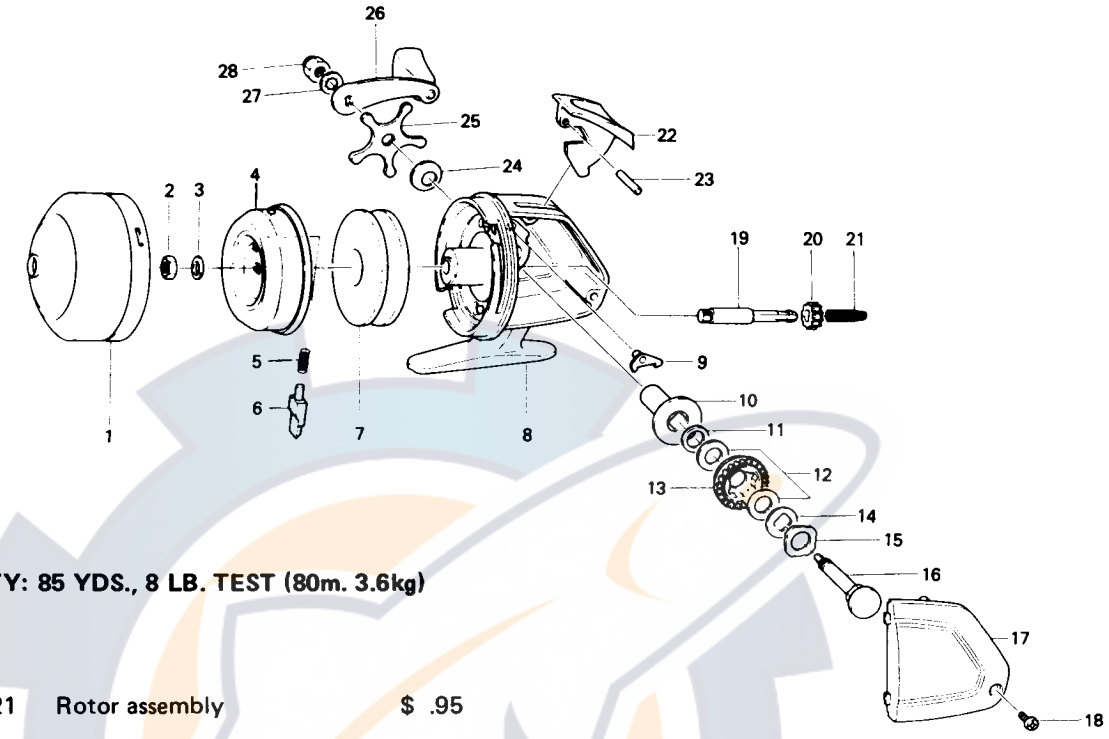

LINE CAPACITY: 85 YDS., 8 LB. TEST (80m. 3.6kg)

Key No. 4 ~ 6

	6-008-2821	Rotor assembly	$ .95

Key No.	Parts No.	Parts Name	Price Per Piece
1	6-008-2931	Front cover	$1.85
2	6-450-5111	Rotor nut	.10
3	6-370-0226	Rotor nut washer	.10
4	6-520-5511	Rotor	N/A
5	6-142-5611	Pick up pin spring	.10
6	6-180-3212	Pick up pin	.10
7	6-512-1621	Spool	1.00
8	6-192-9601	Body	1.75
9	6-770-0501	Anti-reverse claw	.25
10	6-381-4101	Gear shaft metal	.55
11	6-373-0100	Drive gear washer	.10
12	6-373-3211	Drag washer A	.10
13	6-412-0301	Drive gear	1.45
14	6-373-3101	Drag washer B	.10
15	6-373-3011	Drag washer C	$ .10
16	6-421-7301	Drive gear shaft	.55
17	6-063-0701	Body cover	.35
18	6-353-4201	Body cover screw	.10
19	6-392-9501	Main shaft	.50
20	6-400-3211	Pinion gear	.20
21	6-140-9522	Main shaft spring	.10
22	6-290-6911	Push button	.55
23	6-121-2901	Push button pin	.15
24	6-150-8101	Star drag spring washer	.10
25	6-550-1712	Star drag	.60
26	6-745-7901	Handle	.80
27	6-160-2801	Handle washer	.10
28	6-340-9314	Handle nut	.20