www.reelschematic.com

Daiwa
NUMBER 1 IN THE WORLD • BY DESIGN

SPINCASTING REEL 2100B

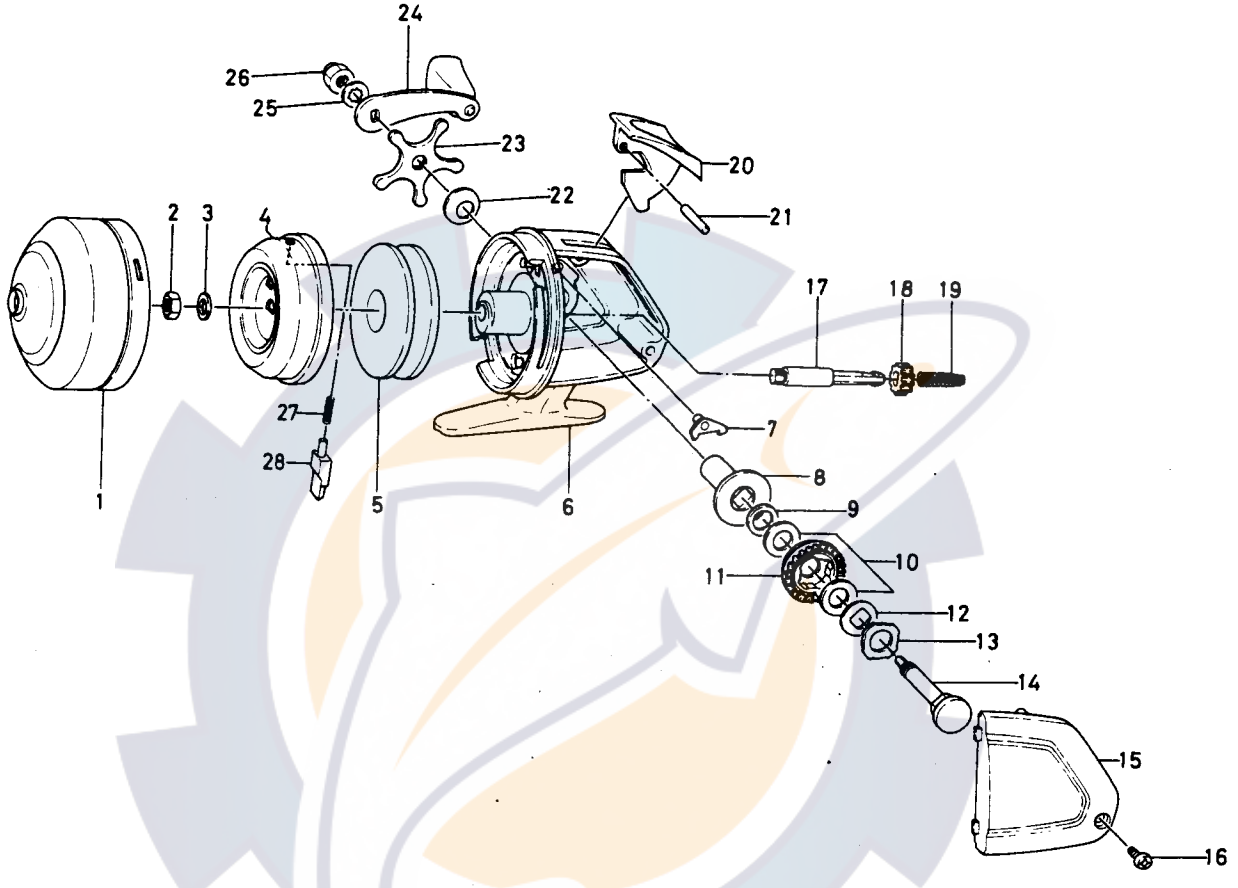

KEY NO. 4 ~ 27 ~ 28
6-008-2821

ROTOR ASSEMBLY

Key No.	Parts No.	Parts Name
1	6-008-2931	Front cover
2	6-450-5111	Rotor nut
3	6-370-0226	Rotor nut washer
4	6-520-5511	Rotor
5	6-512-1621	Spool
6	6-192-9601	Body
7	6-770-0501	Anti-reverse claw
8	6-381-4101	Gear shaft metal
9	6-373-0100	Drive gear washer
10	6-373-3211	Drag washer A
11	6-412-0301	Drive gear
12	6-373-3101	Drag washer B
13	6-373-3011	Drag washer C
14	6-421-7301	Drive gear shaft
15	6-063-0701	Body cover
16	6-353-4201	Body cover screw
17	6-392-9501	Main shaft
18	6-400-3211	Pinion gear
19	6-140-9522	Main shaft spring
20	6-290-6911	Push button
21	6-121-2901	Push button pin
22	6-150-8101	Star drag spring washer
23	6-550-1712	Star drag
24	6-745-7901	Handle
25	6-160-2801	Handle washer
26	6-340-9314	Handle nut
27	6-142-5611	Pick up pin spring
28	6-180-3212	Pick up pin