www.reelschematic.com

6Y2825010

Daiwa
COMMITTED TO TOTAL QUALITY

Please order by part number, not key number.

SPINCASTING REEL 210X

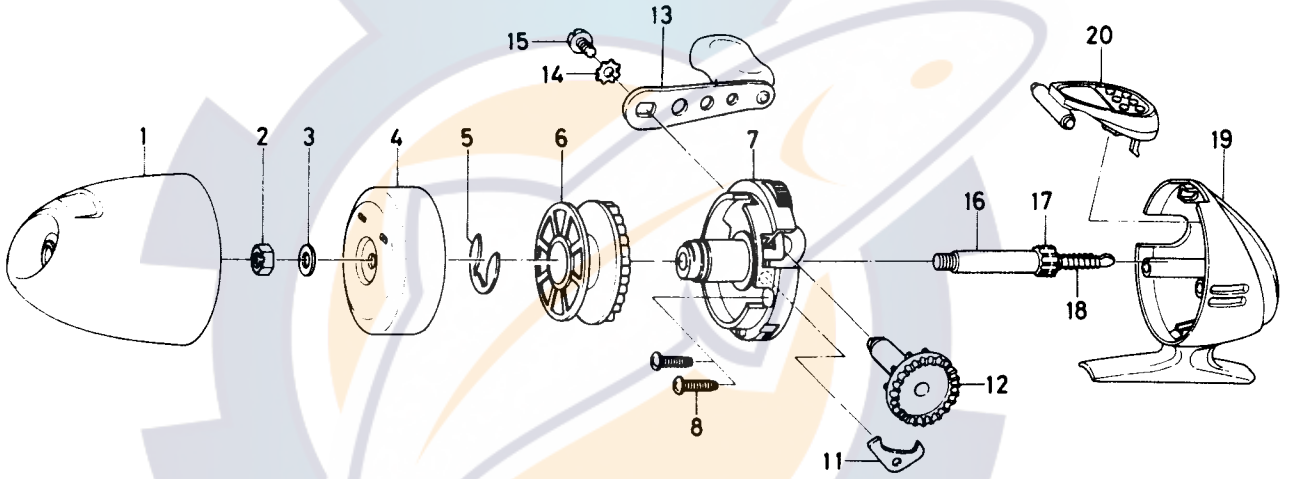

Key NO.	Parts No.	Parts Name
1	F22-3801	Front cover
2	L90-4201	Rotor nut
3	L90-4301	Rotor nut washer
4	B94-7301	Rotor
5	320-0351	Spool retainer
6	B94-5301	Spool
7	F28-1801	Set plate
8	E24-7402	Set plate screw
11	770-0501	Anti-reverse pawl
12	B94-5101	Drive gear

Key NO.	Parts No.	Parts Name
13	F28-1701	Handle assembly
14	160-8001	Handle lock washer
15	353-8202	Handle lock screw
16	B94-4501	Main shaft
17	B94-4601	Pinion gear
18	144-0701	Main shaft spring
19	F22-3201	Body
20	F22-3601	Push button