www.reelschematic.com

Daiwa
NUMBER 1 IN THE WORLD • BY DESIGN

SPINCASTING REEL **2200A**

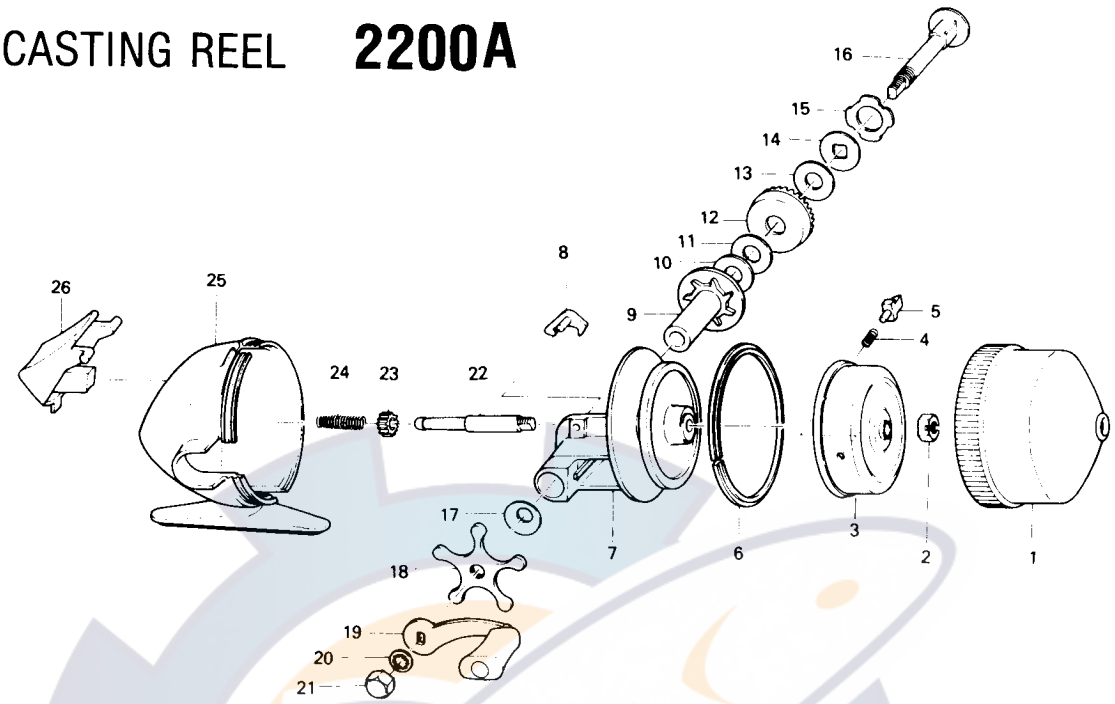

LINE CAPACITY: 85 YDS., 8 LB. TEST (80m. 3.6kg)

Key No. 3 ~ 5

6-735-3001	Rotor assembly	$2.35

Key No.	Parts No.	Parts Name	Price Per Piece
1	6-755-0101	Front cover	$1.20
2	6-340-0132	Rotor nut	.20
3	6-520-5111	Rotor	N/A
4	6-142-5601	Pick up pin spring	.10
5	6-180-3101	Pick up pin	.25
6	6-320-7301	Spool retaining ring	.20
7	6-513-0601	Spool	1.00
8	6-005-7701	Anti-reverse claw	.25
9	6-381-4101	Gear shaft metal	.55
10	6-373-0100	Drive gear washer	.10
11	6-373-3211	Drag washer A	.10
12	6-412-0301	Drive gear	1.45
13	6-373-3211	Drag washer B	.10
14	6-373-3101	Drag washer C	$ .10
15	6-373-3011	Drag washer D	.10
16	6-421-7301	Drive gear shaft	.55
17	6-150-8101	Star drag spring washer	.10
18	6-550-1712	Star drag	.60
19	6-745-7901	Handle	.80
20	6-160-2801	Handle washer	.10
21	6-340-9314	Handle nut	.20
22	6-392-8101	Main shaft	.60
23	6-400-3211	Pinion gear	.20
24	6-140-9512	Main shaft spring	.10
25	6-700-0113	Body	3.75
26	6-290-6711	Push button	.40