www.reelschematic.com

Daiwa
NUMBER 1 IN THE WORLD • BY DESIGN

SPINCASTING REEL 2200A

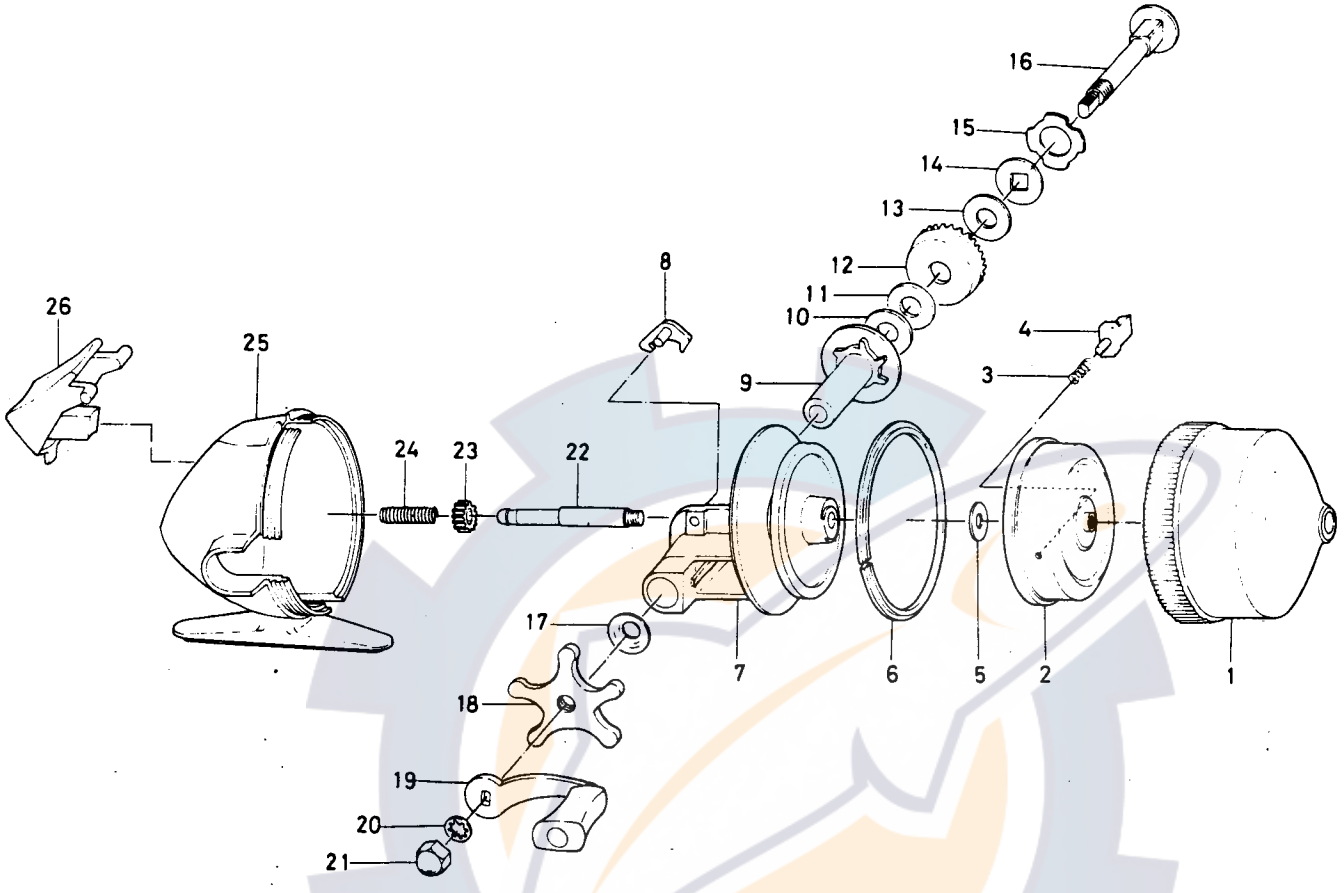

KEY NO. 2 ~ 4
6-735-0111 **ROTOR ASSEMBLY**

Key No.	Parts No.	Parts Name
1	6-755-0101	Front cover
2	6-520-5111	Rotor
3	6-142-5611	Pick up pin spring
4	6-180-3101	Pick up pin
5	6-373-3311	Rotor washer
6	6-320-7301	Spool retaining ring
7	6-731-1902	Spool
8	6-770-0501	Anti-reverse claw
9	6-381-4101	Gear shaft metal
10	6-373-0100	Drive gear washer
11	6-373-3211	Drag washer A
12	6-412-0301	Drive gear
13	6-373-3211	Drag washer B
14	6-373-3101	Drag washer C
15	6-373-3011	Drag washer D
16	6-421-7301	Drive gear shaft
17	6-150-8101	Star drag spring washer
18	6-550-1712	Star drag
19	6-745-7901	Handle
20	6-160-2801	Handle washer
21	6-340-9314	Handle nut
22	6-393-3301	Main shaft
23	6-400-3211	Pinion gear
24	6-140-9522	Main shaft spring
25	6-700-0113	Body
26	6-290-6711	Push button