www.reelschematic.com

Daiwa
NUMBER 1 IN THE WORLD • BY DESIGN

SPINCASTING REEL 5400RL

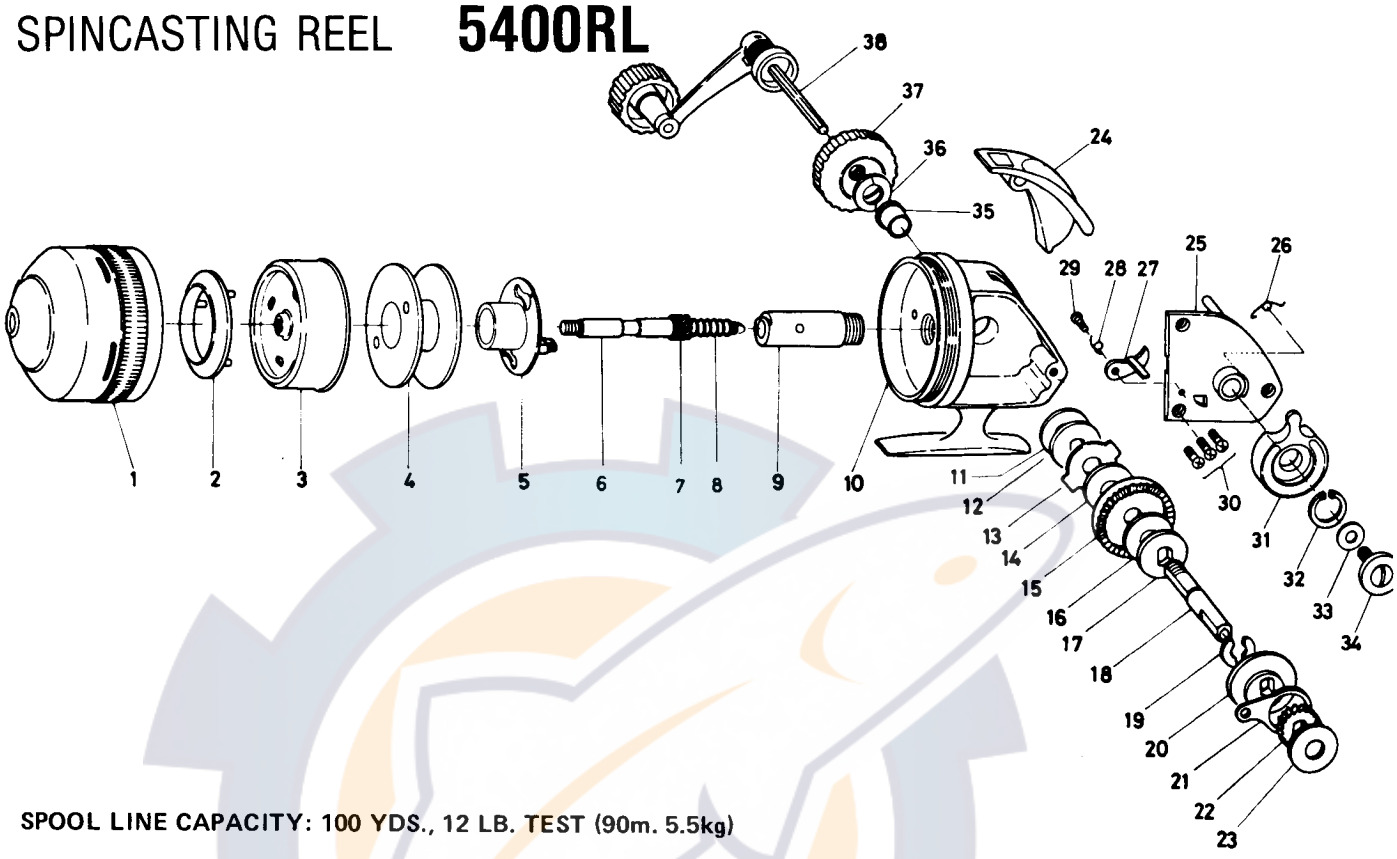

SPOOL LINE CAPACITY: 100 YDS., 12 LB. TEST (90m. 5.5kg)

Key No.	Parts No.	Parts Name	Price Per Piece
1	6-755-0401	Front cover	$4.05
2	6-330-1611	Line stopper	.35
3	6-735-0601	Rotor	5.00
4	6-006-7211	Spool	3.10
5	6-007-9901	Spool retainer	3.40
6-8	6-008-4301	Main shaft assembly	2.20
6	6-391-8701	Main shaft	1.30
7	6-401-4201	Pinion	.80
8	6-142-7701	Main shaft spring	.10
9	6-381-1201	Shaft metal	2.15
10	6-191-5431	Body	8.10
11	6-370-7510	Drive gear adjusting washer	.10
12	6-373-3803	Drag disc washer A	.25
13	6-374-6011	Drag disc washer B	.25
14	6-373-3802	Drag disc washer C	.25
15	6-412-0511	Drive gear	1.00
16	6-373-3901	Drag disc washer D	.25
17	6-373-3801	Drag disc washer E	.25
18	6-421-1901	Drive gear shaft	2.15
19	6-320-3601	Drive gear shaft retainer	.20
20	6-634-0501	Oscillating cam	$ .35
21	6-480-6401	Oscillating slider	.25
22	6-280-2901	Ratchet	.95
23	6-374-6600	Ratchet washer	.20
24	6-008-4514	Push button	2.15
25	6-061-8421	Body cover	2.30
26	6-142-6011	Anti-reverse lever spring	.10
27	6-110-7601	Anti-reverse claw	.25
28	6-142-5901	Anti-reverse claw spring	.10
29	6-351-7701	Anti-reverse claw screw	.10
30	6-351-6401	Body cover screw	.10
31	6-008-0204	Anti-reverse lever	1.00
32	6-320-3401	Anti-reverse lever retainer	.25
33	6-371-9521	Handle washer	.10
34	6-008-0101	Handle screw	1.05
35	6-381-1101	Drive gear metal	.50
36	6-150-8201	Drag spring washer	.15
37	6-007-9601	Drag knob	1.30
38	6-745-6911	Handle	4.60