www.reelschematic.com

Daiwa
NUMBER 1 IN THE WORLD • BY DESIGN

SPINCASTING REEL 6600

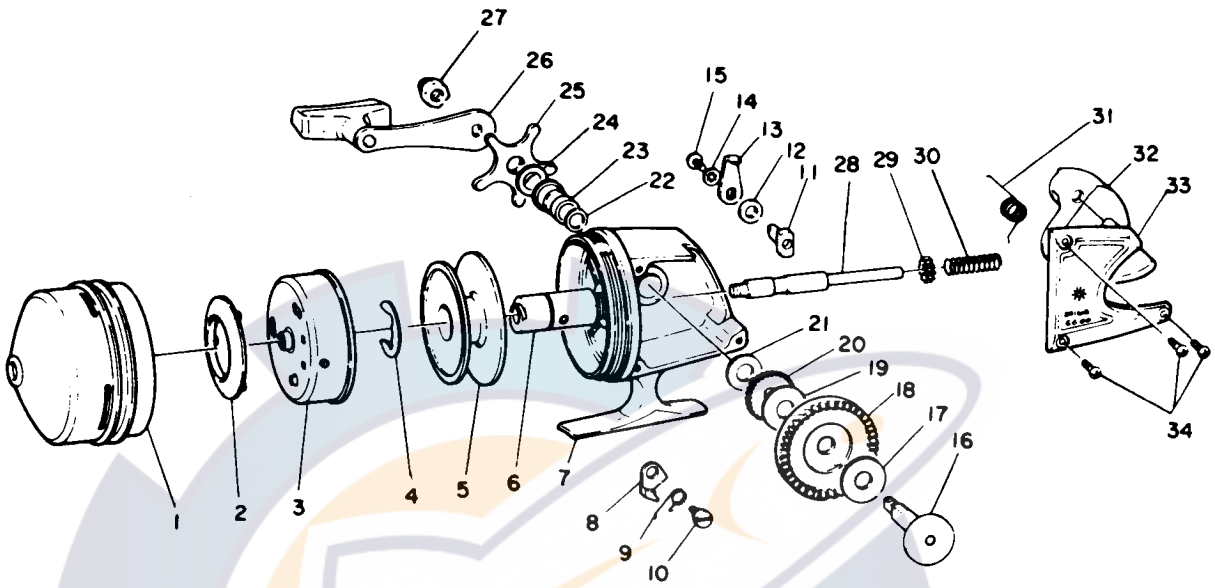

SPOOL LINE CAPACITY: 100 YDS., 12 LB. TEST (90m. 5.5kg)

Key No.	Parts No.	Parts Name	Price Per Piece
1	6-007-8301	Front cover	$4.05
2	6-330-1611	Line stopper	.35
3	6-007-0901	Rotor	4.85
4	6-320-0352	Spool retainer	.25
5	6-512-0201	Spool	2.50
6	6-381-0311	Shaft metal	2.15
7	6-191-4111	Body	8.10
8	6-110-5401	Anti-reverse claw	.55
9	6-141-8201	Anti-reverse claw spring	.15
10	6-361-4501	Anti-reverse claw screw	.20
11	6-460-7301	Anti-reverse cam	.35
12	6-150-1751	Anti-reverse lever spring washer	.10
13	6-540-7101	Anti-reverse lever	.35
14	6-160-3111	Anti-reverse lever washer	.10
15	6-351-4701	Anti-reverse lever screw	.10
16	6-001-9712	Drive gear shaft	2.45
17	6-374-7501	Drag washer A	.25
18	6-411-6701	Drive gear	$1.20
19	6-372-6711	Drag washer B	.25
20	6-280-2101	Anti-reverse gear	1.35
21	6-370-9920	Drag washer C	.10
22	6-372-7602	Shaft holder washer	.10
23	6-380-9312	Drive gear shaft holder	.75
24	6-150-6801	Star drag spring washer	.10
25	6-550-1601	Star drag	1.10
26	6-006-9101	Handle	1.90
27	6-341-1401	Handle nut	.95
28	6-391-7401	Main shaft	1.20
29	6-401-0811	Pinion	.80
30	6-141-8321	Main shaft spring	.10
31	6-141-8411	Push button spring	.10
32	6-290-6401	Push button	1.00
33	6-007-0411	Body cover	4.50
34	6-351-1101	Body cover screw (3 pcs.)	.10