www.reelschematic.com

Daiwa
NUMBER 1 IN THE WORLD • BY DESIGN

SPINCASTING REEL 9300C

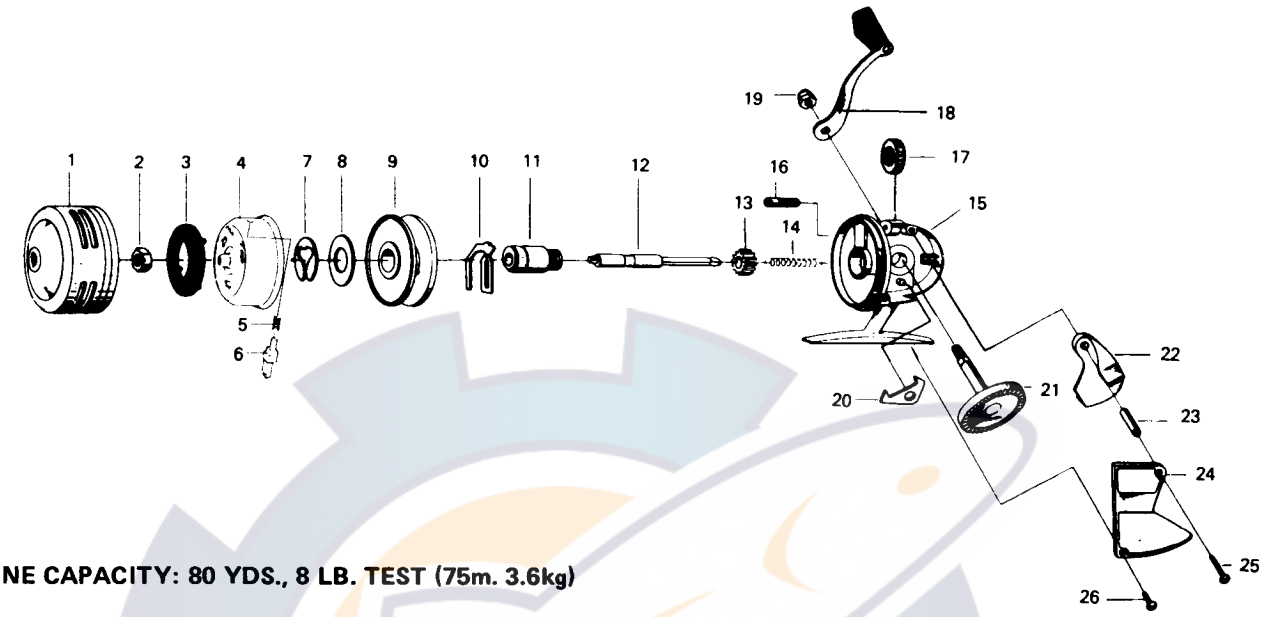

LINE CAPACITY: 80 YDS., 8 LB. TEST (75m. 3.6kg)

Key No. 4 ~ 6

	6-006-9031	Rotor assembly	$2.05

Key No.	Parts No.	Parts Name	Price Per Piece
1	6-005-0901	Front cover	$2.05
2	6-340-9211	Rotor nut	.20
3	6-330-0611	Line stopper	.25
4	6-520-4611	Rotor	N/A
5	6-140-0411	Pick up pin spring	.10
6	6-180-2831	Pick up pin	.40
7	6-320-0351	Spool retainer	.15
8	6-370-4512	Spool washer	.10
9	6-512-0611	Spool	1.50
10	6-150-6321	Drag adjusting plate	.25
11	6-381-0431	Shaft metal	.95
12	6-391-8011	Main shaft	.95
13	6-400-3211	Pinion gear	.20
14	6-141-2521	Main shaft spring	$ .35
15	6-192-6901	Body	3.50
16	6-470-1301	Drag adjusting screw	.10
17	6-440-8301	Drag adjusting dial	.55
18	6-005-0801	Handle	.80
19	6-340-9313	Handle nut	.20
20	6-110-2721	Anti-reverse claw	.10
21	6-411-8521	Drive gear	.70
22	6-290-6111	Push button	.40
23	6-500-4301	Push button sleeve	.15
24	6-008-0601	Body cover	.40
25	6-351-6811	Body cover screw (long)	.10
26	6-351-1002	Body cover screw (short)	.10