www.reelschematic.com

Daiwa
NUMBER 1 IN THE WORLD • BY DESIGN

SPINCASTING REEL 9300C

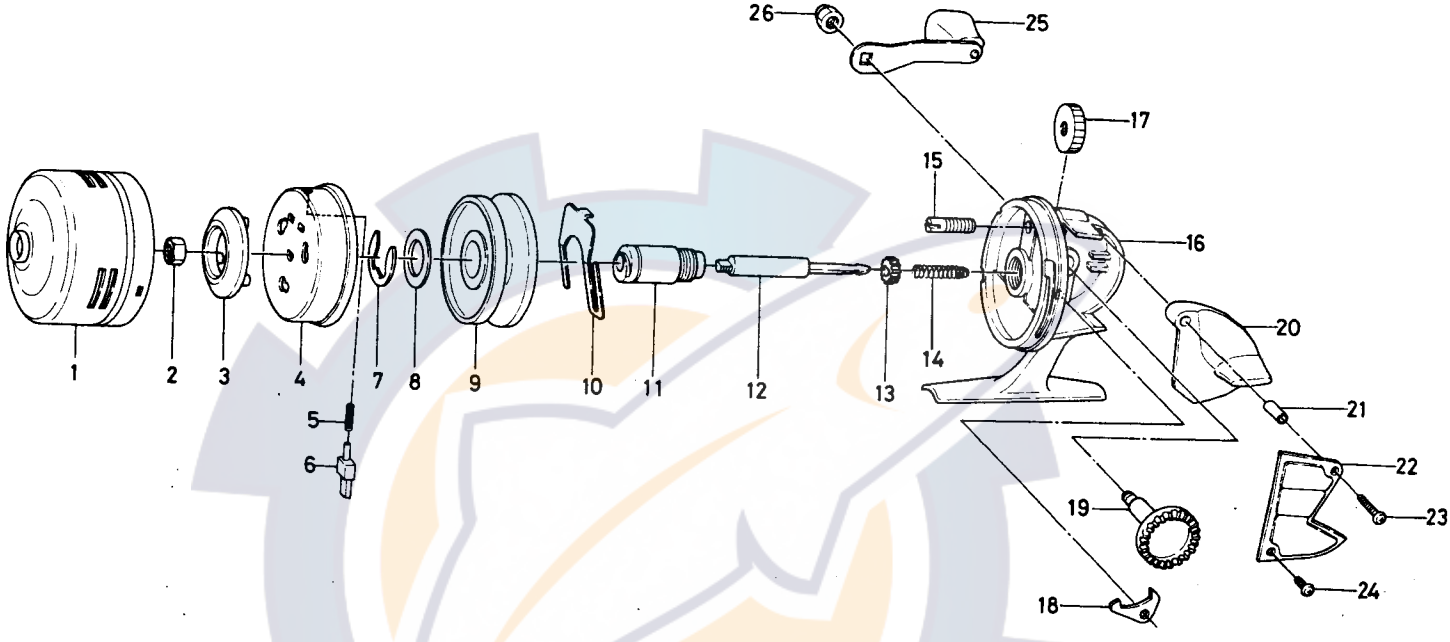

KEY NO. 3 ~ 6
6-006-9031

ROTOR ASSEMBLY

KEY NO. 12 ~ 14
6-710-6601

MAIN SHAFT ASSEMBLY

Key No.	Parts No.	Parts Name
1	6-755-1501	Front cover
2	6-340-9211	Rotor nut
3	6-330-0611	Line stopper
4	6-520-4611	Rotor
5	6-140-0411	Pick up pin spring
6	6-180-2831	Pick up pin
7	6-320-0351	Spool retainer
8	6-370-4512	Spool washer
9	6-731-2401	Spool
10	6-150-6321	Drag adjusting plate
11	6-381-0431	Shaft metal
12	6-391-8011	Main shaft
13	6-400-3211	Pinion gear
14	6-141-2521	Main shaft spring
15	6-470-1301	Drag adjusting screw
16	6-192-6901	Body
17	6-440-8301	Drag adjusting dial
18	6-110-2721	Anti-reverse claw
19	6-411-8521	Drive gear
20	6-290-6111	Push button
21	6-500-4311	Push button sleeve
22	6-008-0601	Body cover
23	6-351-6811	Body cover screw (long)
24	6-351-1002	Body cover screw (short)
25	6-005-0801	Handle
26	6-340-9313	Handle nut