www.reelschematic.com

Daiwa
NUMBER 1 IN THE WORLD • BY DESIGN

SPINCASTING REEL 9600A

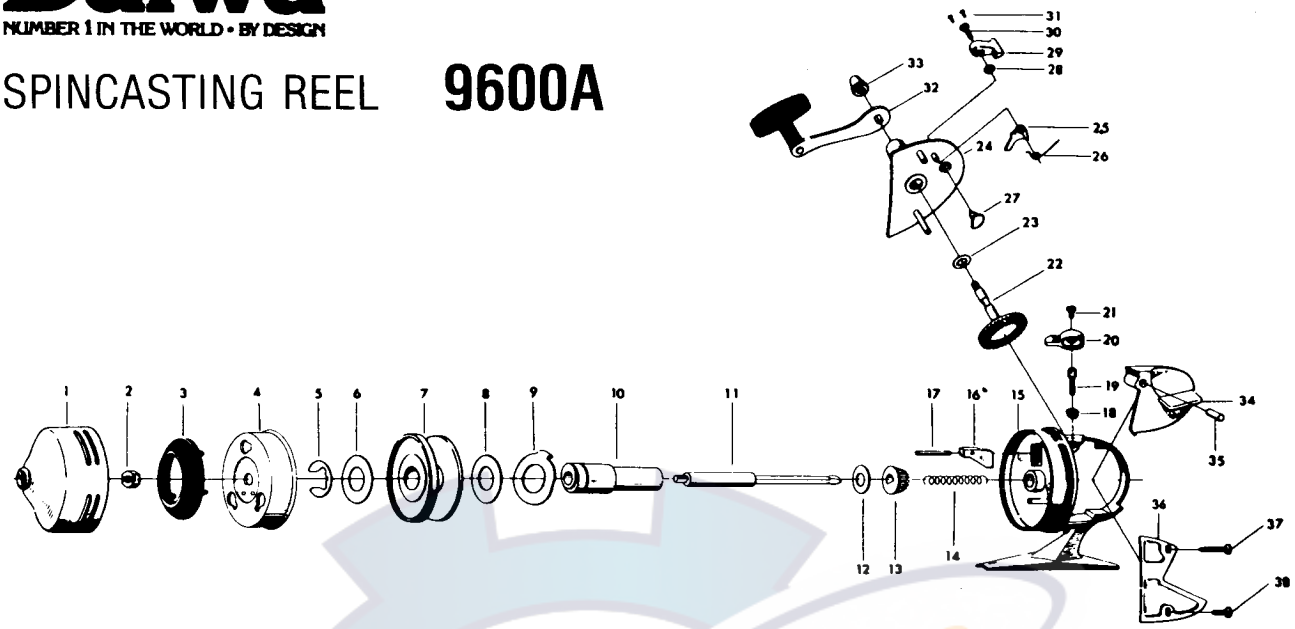

SPOOL LINE CAPACITY: 100 YDS., 8 LB. TEST (90m. 3.6kg)

Key No.	Parts No.	Parts Name	Price Per Piece
1	6-005-4201	Front cover	$2.70
2	6-340-9211	Rotor nut	.20
3	6-330-0111	Line stopper	.25
4	6-005-6911	Rotor	2.45
5	6-320-0351	Spool retainer	.15
6	6-370-0414	Spool washer	.10
7	6-510-2962	Spool	2.00
8	6-370-0414	Spool washer	.10
9	6-150-0111	Drag adjusting plate	.40
10	6-380-0161	Shaft metal	1.15
11	6-390-0151	Main shaft	1.00
12	6-370-0221	Pinion gear washer	.10
13	6-400-7211	Pinion	.25
14	6-141-2621	Main shaft spring	.10
15	6-006-7411	Body	4.75
16	6-430-0101	Brake lever	.35
17	6-120-0111	Brake lever pin	.10
18	6-140-6411	Brake handle spring	.10
19	6-360-5321	Lever screw	.25
20	6-540-0212	Brake adjusting handle	$ .60
21	6-351-0901	Brake handle screw	.10
22	6-411-0021	Drive gear	1.10
23	6-370-0352	Drive gear washer	.10
24	6-000-5641	Body cover A	3.80
25	6-110-1041	Anti-reverse claw	.10
26	6-140-0171	Anti-reverse claw spring	.10
27	6-460-3801	Anti-reverse cam	.50
28	6-150-1751	Anti-reverse lever spring washer	.10
29	6-540-3801	Anti-reverse lever	.55
30	6-351-0901	Anti-reverse lever screw	.10
31	6-351-0801	Screw	.10
32	6-003-0101	Handle	1.40
33	6-340-9611	Handle nut	.30
34	6-290-2811	Push button	.75
35	6-500-4001	Push button sleeve	.25
36	6-005-7301	Body cover	1.20
37	6-351-6301	Body cover screw (long)	.10
38	6-351-0701	Body cover screw (short)	.10