www.reelschematic.com

Daiwa
NUMBER 1 IN THE WORLD • BY DESIGN

SPINCASTING REEL 9700A

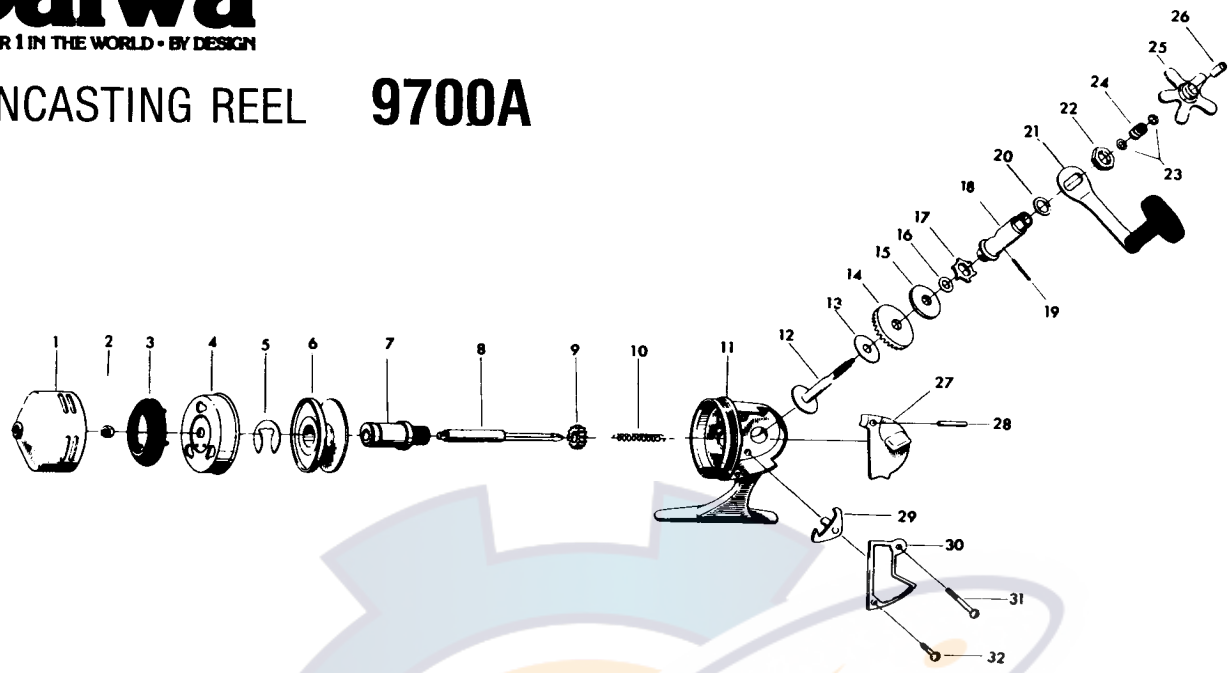

SPOOL LINE CAPACITY: 100 YDS., 12 LB. TEST (90m. 5.5kg)

Key No.	Parts No.	Parts Name	Price Per Piece
1	6-005-4201	Front cover	$2.70
2	6-340-9211	Rotor nut	.20
3	6-330-0111	Line stopper	.25
4	6-005-6911	Rotor	2.45
5	6-320-0351	Spool retainer	.15
6	6-510-1371	Spool	2.00
7	6-380-1061	Shaft metal	1.80
8	6-390-9941	Main shaft	1.10
9	6-400-0921	Pinion	.75
10	6-140-9521	Main shaft spring	.10
11	6-007-6901	Body	6.40
12	6-000-5911	Drive gear shaft	1.75
13	6-370-2451	Drag washer A	.10
14	6-410-0911	Drive gear	.50
15	6-370-2811	Drag washer B	.10
16	6-370-0350	Drag washer C	.10
17	6-280-0801	Anti-reverse gear	$ .25
18	6-380-9101	Drive gear shaft holder	1.20
19	6-120-0701	Shaft holder pin	.15
20	6-370-2710	Drag washer D	.10
21	6-006-8401	Handle	1.40
22	6-340-1301	Handle nut	.30
23	6-370-2330	Star drag washer	.10
24	6-140-1451	Star drag spring	.45
25	6-006-3101	Star drag	1.20
26	6-340-1621	Star drag nut	.25
27	6-290-3411	Push button	.95
28	6-500-2501	Push button sleeve	.30
29	6-006-2901	Anti-reverse claw	.45
30	6-061-1001	Body cover	.95
31	6-351-4101	Body cover screw (long)	.10
32	6-351-1001	Body cover screw (short)	.10