www.reelschematic.com

Daiwa
COMMITTED TO TOTAL QUALITY

SPINCASTING REEL **AC120**

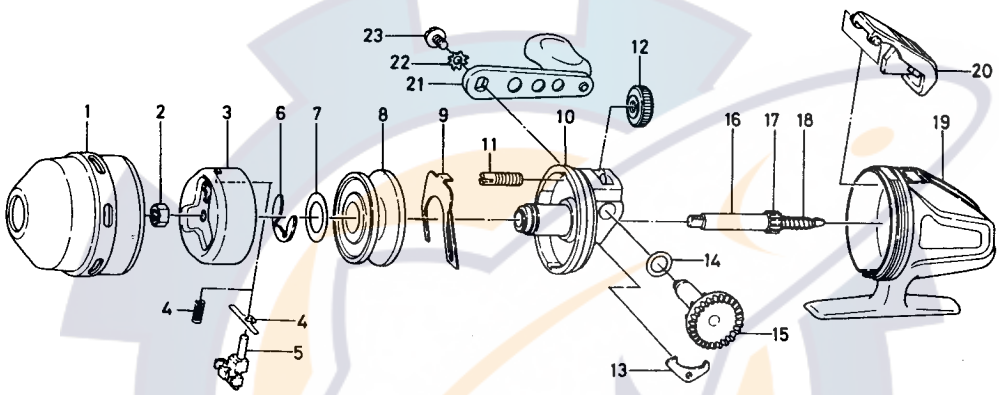

Key No.	Parts No.	Parts Name
1	B79-7401	Front cover
2	B55-4001	Rotor nut
3	B81-1301	Rotor
4	142-5111	Pick up pin spring
5	B08-8205	Pick up pin
6	320-0351	Spool retainer
7	370-4512	Spool washer
8	B81-1101	Spool
9	B61-0501	Drag adjusting plate
10	B81-1001	Set plate
11	470-1302	Drag adjusting screw
12	B60-9201	Drag adjusting dial
13	770-0501	Anti-reverse claw
14	373-0100	Drive gear washer
15	B08-6301	Drive gear
16	B08-6601	Main shaft
17	B08-6701	Pinion gear
18	141-2521	Main shaft spring
19	B82-6001	Body
20	B80-3801	Push button
21	B80-4701	Handle
22	160-8001	Handle washer
23	B08-7301	Handle screw

Sold as one unit
B08-6501
Main shaft assembly