www.reelschematic.com

Daiwa
COMMITTED TO TOTAL QUALITY

SPINCASTING REEL **AG100**

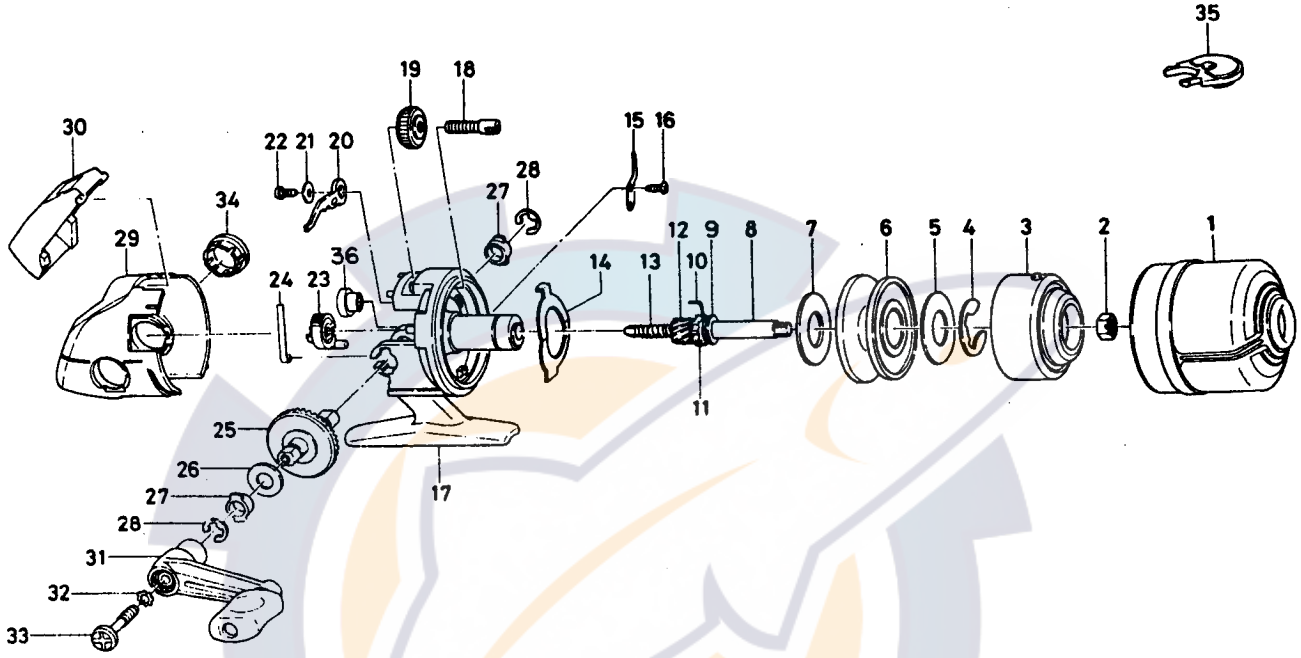

Key No.	Parts No.	Parts Name
1	·K00-4601	Front cover
2	·B55-4001	Rotor nut
3	·K00-4002	Rotor
4	·320-0351	Spool retainer
5	·370-0412	Drag washer
6	·B61-0303	Spool
7	·370-0412	Drag washer
8	·K00-3401	Main shaft
9	371-6903	Washer
10	·K00-2701	Anti-reverse pawl spring
11	K00-2801	Anti-reverse ratchet
12	402-6401	Pinion gear
13	142-7712	Main shaft spring
14	151-6501	Drag plate
15	030-6001	Click pawl
16	B93-3001	Click pawl screw
17	K00-3901	Body
18	363-5911	Drag screw

Key No.	Parts No.	Parts Name
19	·B60-9202	Dial
20	·K00-0901	Anti-reverse pawl
21	·K00-1001	Anti-reverse pawl washer
22	·B93-3001	Anti-reverse pawl screw
23	·K00-1101	Anti-reverse-lever
24	·K00-1201	Anti-reverse-lever spring
25	·K00-2901	Drive gear
26	·370-9900	Drive gear washer
27	·K00-7001	Bushing
28	·B01-3101	Bushing retainer
29	·K00-3802	Side cover
30	·K00-0301	Push button
31	·K00-1301	Handle assembly
32	·160-8101	Handle lock washer
33	·K00-5901	Handle lock screw
34	·K00-0701	Handle screw cap
35	·K00-2201	Line snubber
36	·K00-7201	Bushing