www.reelschematic.com

Daiwa
COMMITTED TO TOTAL QUALITY

SPINCASTING REEL **AG170**

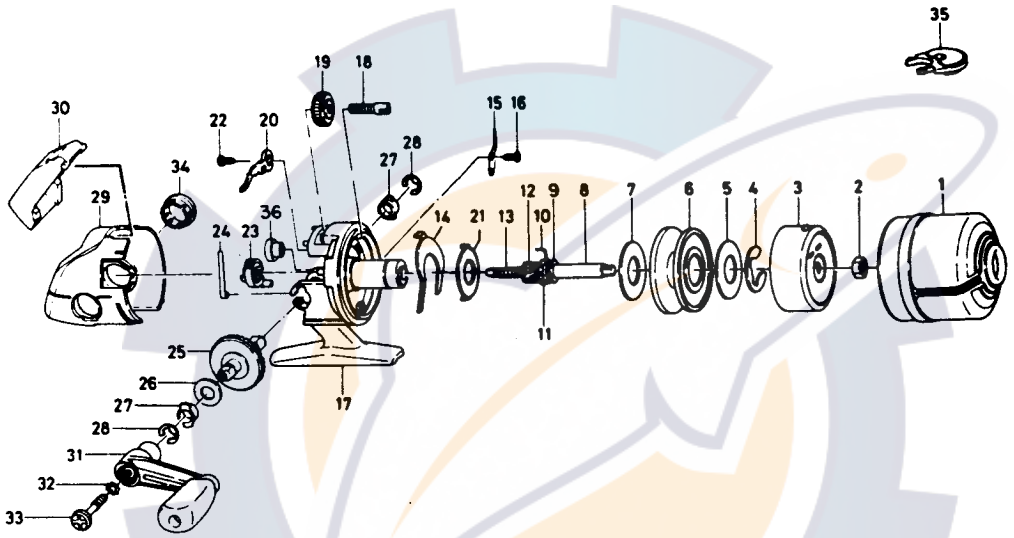

Key No.	Parts No.	Parts Name
1	K03-6201	Front cover
2	B55-4001	Rotor nut
3	K03-5602	Rotor
4	320-0351	Spool retainer
5	370-0412	Drag washer
6	K03-5501	Spool
7	370-0412	Drag washer
8	K03-4901	Main shaft
9	371-6903	washer
10	K00-2701	Anti-reverse pawl spring
11	K00-2801	Anti-reverse ratchet
12	402-6701	Pinion gear
13	142-7712	Main shaft spring
14	B30-7501	Drag plate
15	030-6001	Click pawl
16	B93-3001	Click pawl screw
17	K03-4301	Body
18	K03-4501	Drag screw

Key No.	Parts No.	Parts Name
19	B08-7401	Dial
20	K03-4401	Anti-reverse pawl
21	376-0401	Drag spring washer
22	B84-2102	Anti-reverse pawl screw
23	K00-1101	Anti-reverse-lever
24	K00-1201	Anti-reverse-lever spring
25	K03-5001	Drive gear
26	370-9900	Drive gear washer
27	K00-7001	Bushing
28	B01-3101	Bushing retainer
29	K03-4002	Side cover
30	K03-4201	Push button
31	K03-5101	Handle assembly
32	160-8101	Handle lockwasher
33	K03-5401	Handle lock screw
34	K00-0601	Handle screwcap
35	K03-6301	Line snubber
36	K00-7201	Bushing