www.reelschematic.com

Daiwa
COMMITTED TO TOTAL QUALITY

SPINCASTING REEL AG80A/100A

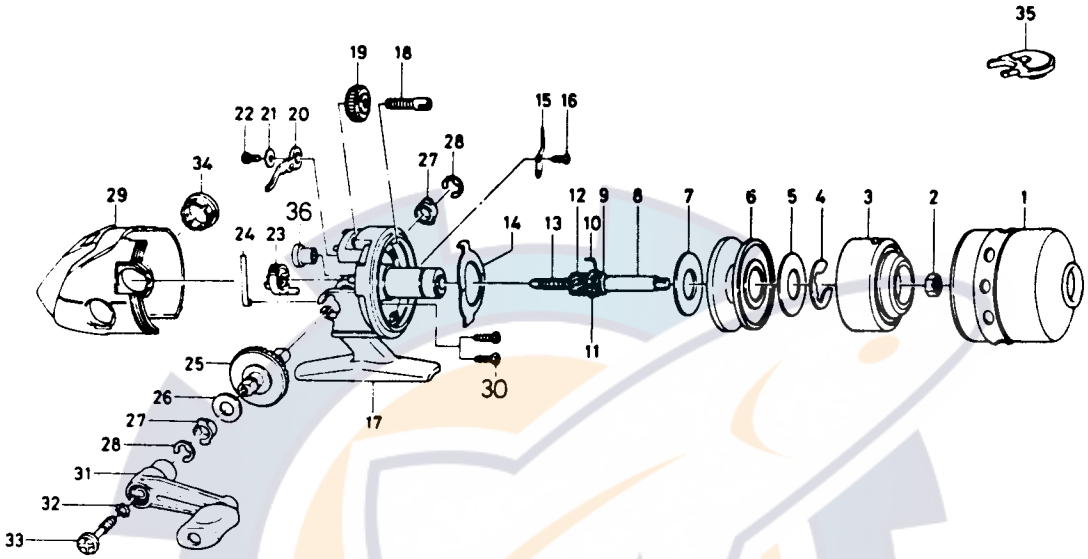

Key No.	Parts No.	Parts Name
1	K06-1102	Front cover
2	B55-4001	Rotor nut
3	K03-8602	Rotor
4	320-0351	Spool retainer
5	370-0412	Drag washer
6	B61-2005	Spool
7	370-0412	Drag washer
8	K06-0101	Main shaft
9	371-6903	washer
10	K00-2701	Anti-reverse pawl spring
11	K00-2801	Anti-reverse ratchet
12	402-6401	Pinion gear
13	142-7712	Main shaft spring
14	151-6501	Drag plate
15	030-6001	Click pawl
16	B93-3001	Click pawl screw
17	K05-9501	Body
18	K06-2801	Drag Screw
19	B60-9202	Dial
20	K00-0901	Anti-reverse pawl
21	K00-1001	Anti-reverse pawl washer
22	B93-3001	Anti-reverse pawl screw

key No.	Parts No.	Parts Name
23	K00-1101	Anti-reverse-lever
24	K00-1201	Anti-reverse-lever spring
25	K00-2901	Drive gear
26	370-9900	Drive gear washer
27	K00-7001	Bushing
28	B01-3101	Bushing retainer
29	K05-9102	Side cover
30	K05-3401	Side cover screw
31	K00-1301	Handle assembly
32	160-8101	Handle lock washer
33	K00-5901	Handle lock screw
34	K00-0601	Handle screw cap
35	K00-2201	Line snubber
36	K00-7201	Bushing

AG100A Special Parts

1	K06-3202	Front cover
3	K00-4006	Rotor
6	B61-0304	Spool
17	K06-3001	Body
29	K06-3302	Side cover
30	K06-2701	Side cover screw