www.reelschematic.com

Daiwa
COMMITTED TO TOTAL QUALITY

SPINCASTING REEL — AG80X / 100X

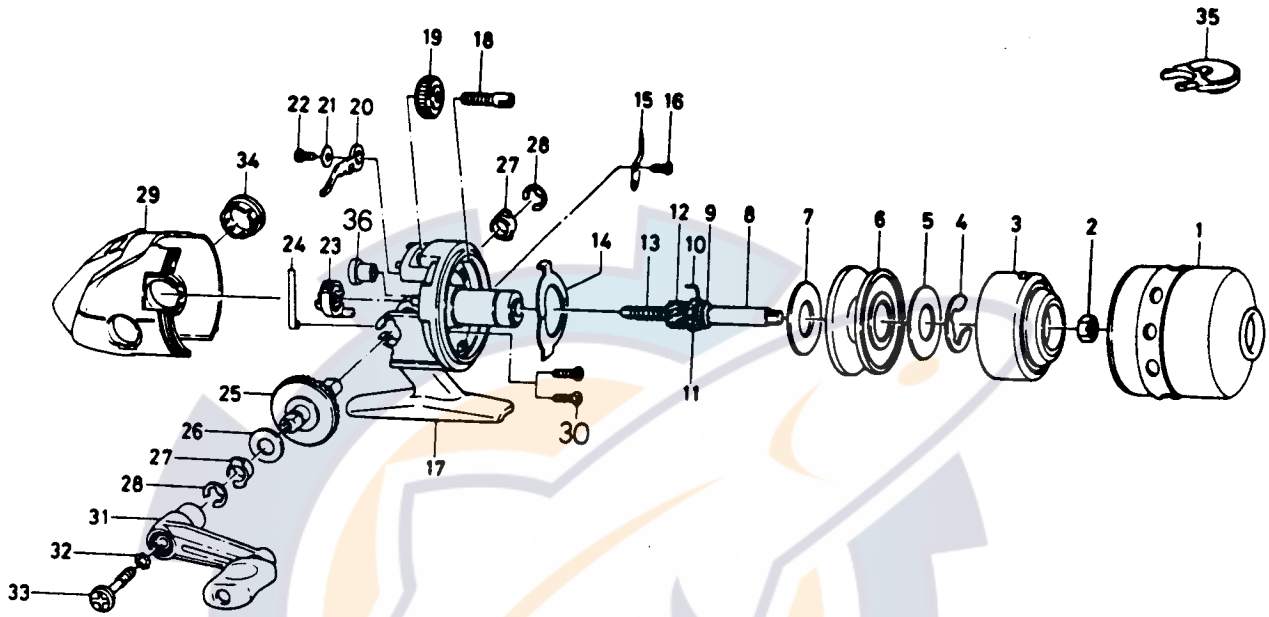

Key No.	Part No.	Part Name	Price
1	K09-8702	Front cover	4.80
2	B55-4001	Rotor nut	.50
3	K03-8602	Rotor	4.50
4	320-0351	Spool retainer	.40
5	370-0412	Drag washer	.40
6	B61-2005	Spool	2.75
7	370-0412	Drag washer	.40
8	K06-0101	Main shaft	1.05
9	371-6903	Washer	.35
10	K00-2701	Anti-reverse pawl spring	.55
11	K00-2801	Anti-reverse ratchet	.95
12	402-6401	Pinion gear	1.40
13	142-7712	Main shaft spring	.55
14	151-6501	Drag plate	.95
15	030-6001	Click pawl	.45
16	B93-3001	Click pawl screw	.45
17	K05-9501	Body	2.80
18	K06-2801	Drag screw	.50
19	B60-9202	Dial	.80
20	K00-0901	Anti-reverse pawl	.50
21	K00-1001	Anti-reverse pawl washer	.35
22	B93-3001	Anti-reverse pawl screw	.45

Key No.	Part No.	Part Name	Price
23	K00-1101	Anti-reverse lever	.60
24	K00-1201	Anti-reverse lever spring	.55
25	K00-2901	Drive gear	1.65
26	370-9900	Drive gear washer	.45
27	K00-7001	Bushing	.50
28	B01-3101	Bushing retainer	.40
29	K09-9201	Side cover	3.30
30	K05-3401	Side cover screw	.40
31	K00-1301	Handle assembly	2.65
32	160-8101	Handle lock washer	.45
33	K00-5901	Handle lock screw	.70
34	K00-0601	Handle screw cap	.40
35	K00-2201	Line snubber	.40
36	K00-7201	Bushing	.50

AG100X Special Parts:

1	K09-8902	Front cover	5.00
3	K00-4006	Rotor	4.85
6	B61-0304	Spool	3.00
17	K06-3001	Body	3.00
29	K06-3302	Side cover	3.20
30	K05-3401	Side cover screw	.40