www.reelschematic.com

SPINCASTING REEL — **J80X**

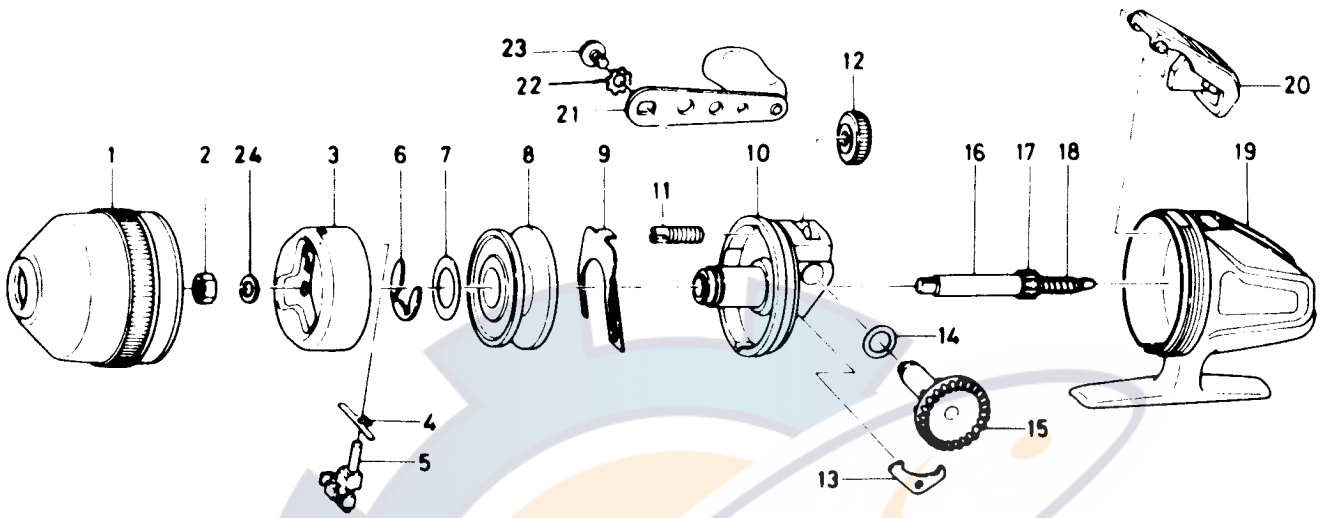

Key No.	Parts No.	Parts Name
1	L13 4801	Front cover
2	E42 5101	Rotor nut
3	B60 9501	Rotor
4	L09 3901	Pick up pin spring
5	B08 8203	Pick up pin
6	320 0351	Spool retainer
7	370 4512	Spool washer
8	B61 2004	Spool
9	150 6321	Drag adjusting plate
10	E40 3701	Set plate
11	470 1302	Drag screw
12	B60 9201	Dial

Key No.	Parts No.	Parts Name
13	770 0501	Anti-reverse pawl
14	373 7800	Drive gear washer
15	B08 6301	Drive gear
16	B08 6601	Main shaft
17	B08 6701	Pinion gear
18	141 2522	Main shaft spring
19	E42 1204	Body
20	B78 5302	Push button
21	B63 6301	Handle assembly
22	160 8001	Handle lock washer
23	353 8202	Handle lock screw
24	E42 5201	Spacer