www.reelschematic.com

Daiwa
COMMITTED TO TOTAL QUALITY

# SPINCASTING REEL **M120**

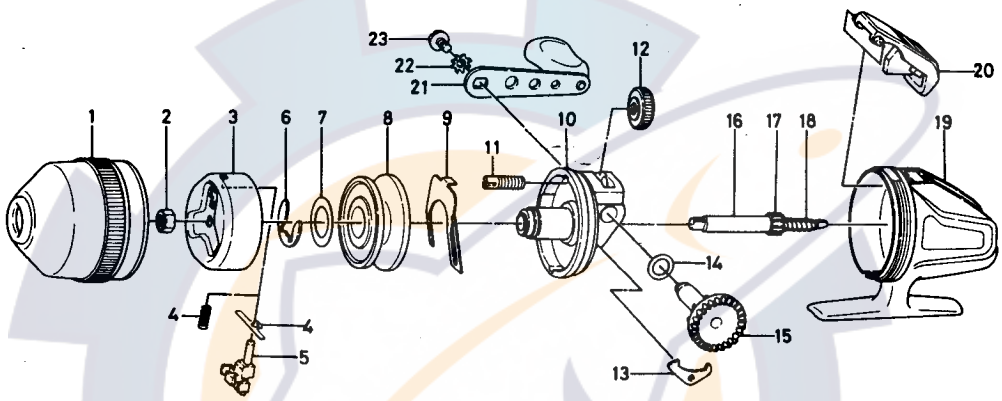


| Key No. | Parts No. | Parts Name |
|---|---|---|
| 1 | B81-1601 | Front cover |
| 2 | B55-4001 | Rotor nut |
| 3 | B81-1301 | Rotor |
| 4 | 142-5111 | Pick up pin spring |
| 5 | B08-8205 | Pick up pin |
| 6 | 320-0351 | Spool retainer |
| 7 | 370-4512 | Spool washer |
| 8 | B81-1102 | Spool |
| 9 | B61-0501 | Drag adjusting plate |
| 10 | B81-1001 | Set plate |
| 11 | 470-1302 | Drag adjusting screw |
| 12 | B60-9201 | Drag adjusting dial |

| Key No. | Parts No. | Parts Name | |
|---|---|---|---|
| 13 | 770-0501 | Anti-reverse claw | |
| 14 | 373-0100 | Drive gear washer | |
| 15 | B08-6301 | Drive gear | |
| 16 | B08-6601 | Main shaft | Sold as one unit B08-6501 Main shaft assembly |
| 17 | B08-6701 | Pinion gear | |
| 18 | 141-2521 | Main shaft spring | |
| 19 | B81-0601 | Body | |
| 20 | B80-3801 | Push button | |
| 21 | B81-1401 | Handle | |
| 22 | 160-8001 | Handle washer | |
| 23 | B08-7301 | Handle screw | |