www.reelschematic.com

Daiwa
COMMITTED TO TOTAL QUALITY

SPIN CASTING REEL **M80/M100**

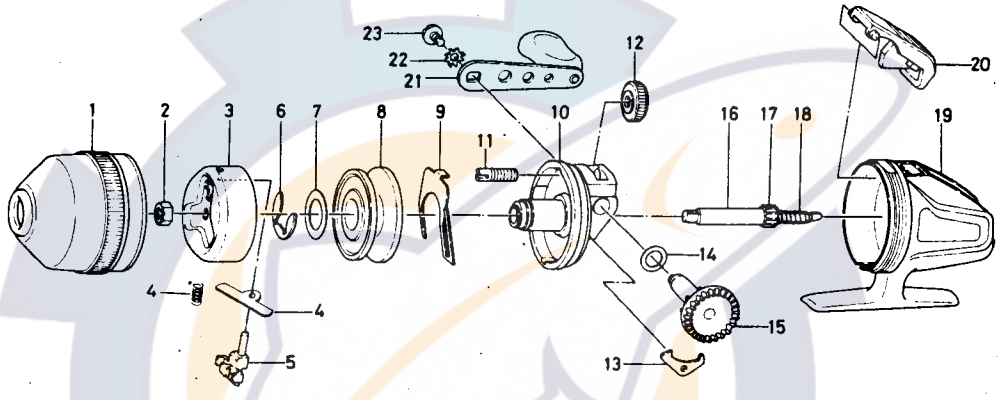

Key No.	Parts No.	Parts Name
1	B60-9701	Front cover
2	B55-4001	Rotor nut
3	B60-9501	Rotor
4	B71-6101	Pick up pin spring
5	B08-8203	Pick up pin
6	320-0351	Spool retainer
7	370-4512	Spool washer
8	B61-2001	Spool
9	150-6321	Drag adjusting plate
10	B60-9101	Set plate
11	470-1302	Drag adjusting screw
12	B60-9201	Drag adjusting dial
13	770-0501	Anti-reverse claw
14	373-7800	Drive gear washer
15	B08-6301	Drive gear
16	B08-6601	Main shaft — Sold as one unit 6-B08-6501 Main shaft assembly
17	B08-6701	Pinion gear
18	141-2521	Main shaft spring

Key No.	Parts No.	Parts Name
19	B60-8301	Body
20	B60-8901	Push button
21	B08-7101	Handle
22	160-8001	Handle washer
23	B08-7301	Handle screw

M100 Special Parts

Key No.	Parts No.	Parts Name
1	B60-9901	Front cover
3	B61-0201	Rotor
5	B08-8204	Pick up pin
8	B61-0301	Spool
9	B61-0501	Drag adjusting plate
10	B61-0601	Set plate
19	B61-1101	Body
20	B61-0701	Push button
4	144-1801	Pick up pin spring