www.reelschematic.com

Daiwa
COMMITTED TO TOTAL QUALITY

UNDER-SPINCAST REEL — US40XA

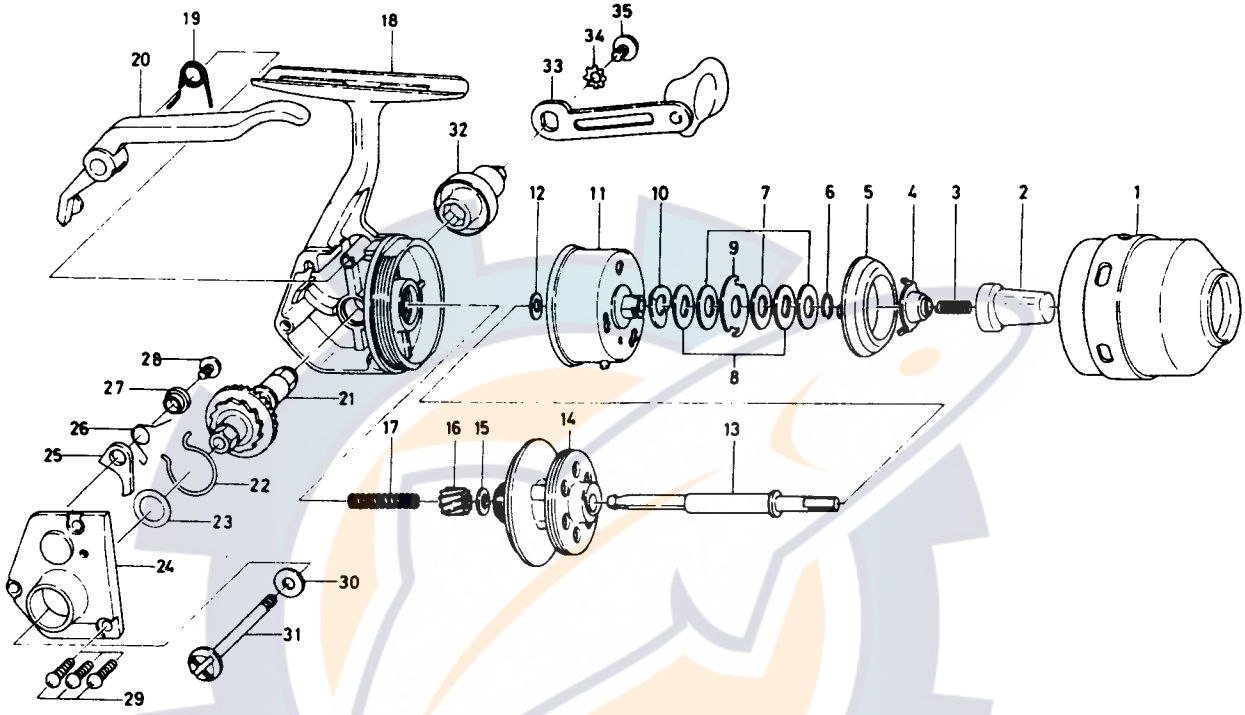

Key No.	Part No.	Part Name	Price
1	L09-3701	Front cover	6.30
2	L50-7201	Drag knob	1.00
3	145-1501	Drag spring	.35
4	376-1312	Drag adjusting plate	1.10
5	330-4601	Line stopper	.65
6	171-7801	Drag washer retainer	.35
7	376-1101	Drag washer	.70
8	376-1001	Key washer	.45
9	376-1201	Eared washer	.55
10	150-6801	Spring washer	.50
11	L09-3501	Rotor assembly	4.50
12	376-0901	Rotor washer	.55
13	B62-4001	Main shaft assembly	1.25
14	800-1442	Spool assembly	3.75
15	373-4501	Pinion washer	.35
16	B62-4201	Pinion gear	1.95
17	B62-4301	Main shaft spring	.55
18	L09-2301	Body assembly	4.50

Key No.	Part No.	Part Name	Price
19	L09-2601	Casting trigger spring	.60
20	L09-2501	Casting trigger	2.65
21	B62-4402	Drive gear	1.85
22	L09-2801	Anti-reverse pawl spring A	.70
23	373-7802	Drive gear washer	.40
24	L09-2901	Side cover	2.25
25	L09-3101	Anti-reverse pawl	.60
26	L09-3201	Anti-reverse pawl spring B	.60
27	L09-3801	Anti-reverse pawl collar	.50
28	E36-4202	Anti-reverse pawl screw	.60
29	B00-9702	Side cover screw	.65
30	372-3501	Handle lock washer A	.55
31	L10-0601	Handle lock screw A	.85
32	B62-4602	Handle stand	2.10
33	746-0101	Handle assembly	2.30
34	160-8001	Handle lock washer B	.50
35	353-8203	Handle lock screw B	.50