Daiwa
COMMITTED TO TOTAL QUALITY

SPINCASTING REEL — MINICAST-2-G

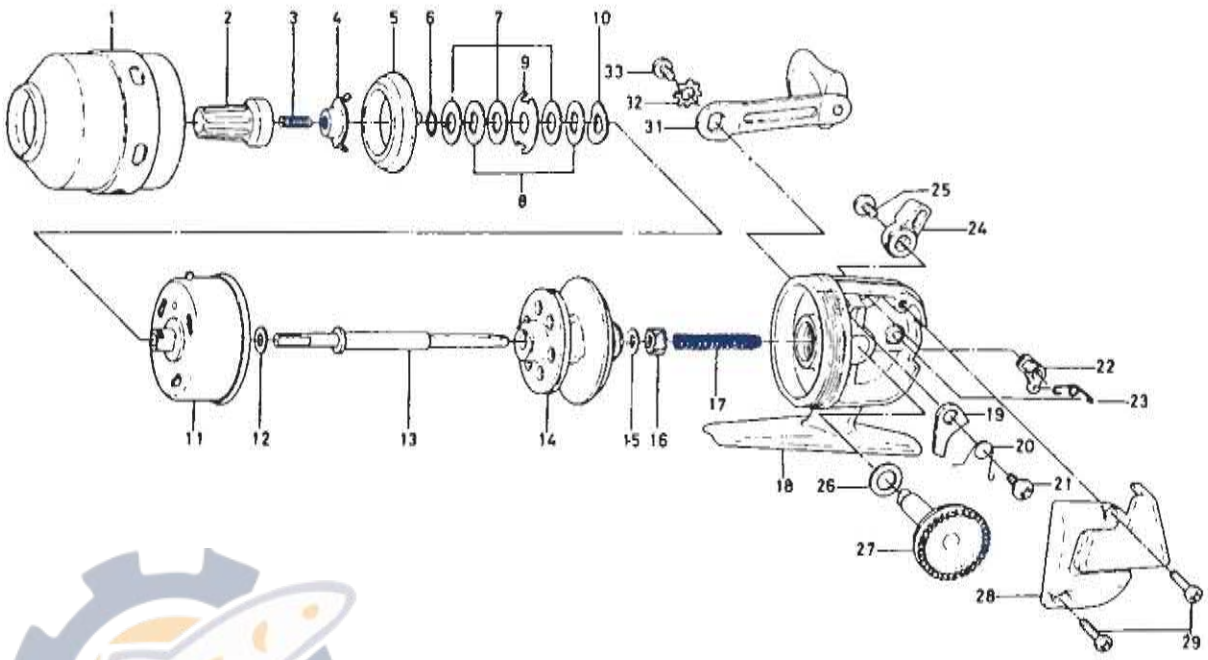

Key No.	Part No.	Part Name
1	K06-6101	Front cover
2	441-6002	Drag knob
3	145-1501	Drag spring
4	376-1312	Drag adjusting plate
5	330-4601	Line stopper
6	171-7801	Drag washer retainer
7	376-1101	Drag washer A
8	376-1001	Drag washer B
9	376-1201	Drag washer C
10	150-6801	Drag washer D
11	736-7303	Rotor
12	376-0901	Rotor washer
13	711-4911	Main shaft
14	800-1443	Spool
15	373-4501	Pinion washer
16	402-3301	Pinion gear

Key No.	Part No.	Part Name
17	144-0701	Main shaft spring
18	193-3806	Body
19	111-8501	Anti-reverse claw
20	144-5111	Anti-reverse claw spring
21	350-1933	Anti-reverse claw screw
22	467-7601	Anti-reverse cam
23	B09-1401	Anti-reverse cam spring
24	541-3132	Anti-reverse lever
25	351-4702	Anti-reverse lever screw
26	373-0100	Drive gear washer
27	413-1512	Drive gear
28	707-0101	Body cover
29	351-1102	Body cover screw
31	747-7202	Handle
32	160-8001	Handle washer
33	352-1102	Handle screw

ReelSchematic