Please order by part number, not key number

MINICAST 40

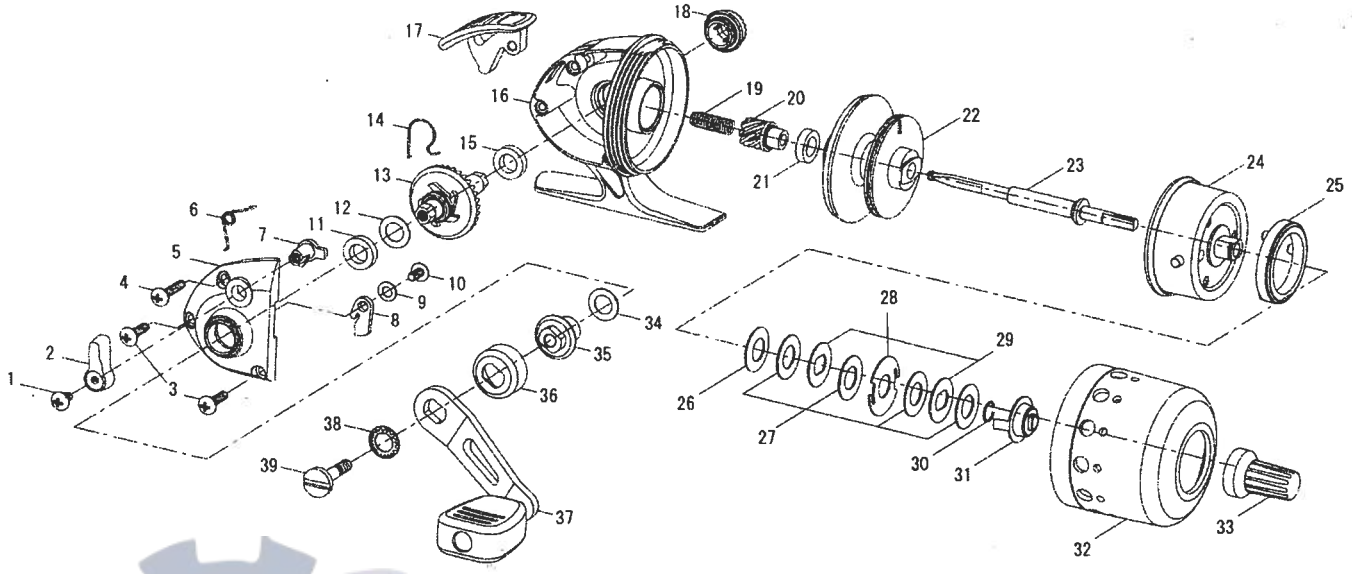

Key No.	Parts No.	Parts Name
1	W32-1501	A/R LEVER SCREW
2	W32-1601	A/R LEVER
3	W32-1701	SIDE COVER SCREW A
4	W32-1801	SIDE COVER SCREW B
5	W32-1901	SIDE COVER
6	W32-2001	A/R CAM SPRING
7	W32-2101	A/R CAM
8	W32-2201	A/R PAWL
9	W32-2301	A/R PAWL WASHER
10	W32-2401	A/R PAWL SCREW
11, 15	W32-2501	DRIVE GEAR BUSHING
12	W32-2601	DRIVE GEAR WASHER
13	W32-2701	DRIVE GEAR
14	W32-2801	A/R PAWL SPRING
16	W32-2901	BODY
17	W32-3001	PUSH BUTTON
18	W32-3101	HANDLE CAP
19	W32-3201	MAIN SHAFT SPRING
20	W32-3301	PINION GEAR

Key No.	Parts No.	Parts Name
21	W32-2501	PINION BUSHING
22	W32-3401	SPOOL
23	W32-3501	MAIN SHAFT
24	W32-3601	ROTOR
25	W32-3701	LINE STOPPER
26	W32-3801	DRAG SPRING WASHER
27	W32-3901	DRAG WASHER
28	W32-4001	EARED WASHER
29	W32-4101	KEY WASHER
30	W32-4201	DRAG WASHER RET
31	W32-4301	DRAG ADJ PLT
32	W32-4401	FRONT COVER
33	W32-4501	DRAG KNOB
34	W32-4601	HANDLE METAL WASHER
35	W32-4701	HANDLE METAL
36	W32-4801	HANDLE STAND
37	W32-4901	HANDLE
38	W32-5001	HANDLE WASHER
39	W32-5101	HANDLE SCREW

ReelSchematic