Daiwa
COMMITTED TO TOTAL QUALITY

UNDER-SPINCAST REEL **US40**

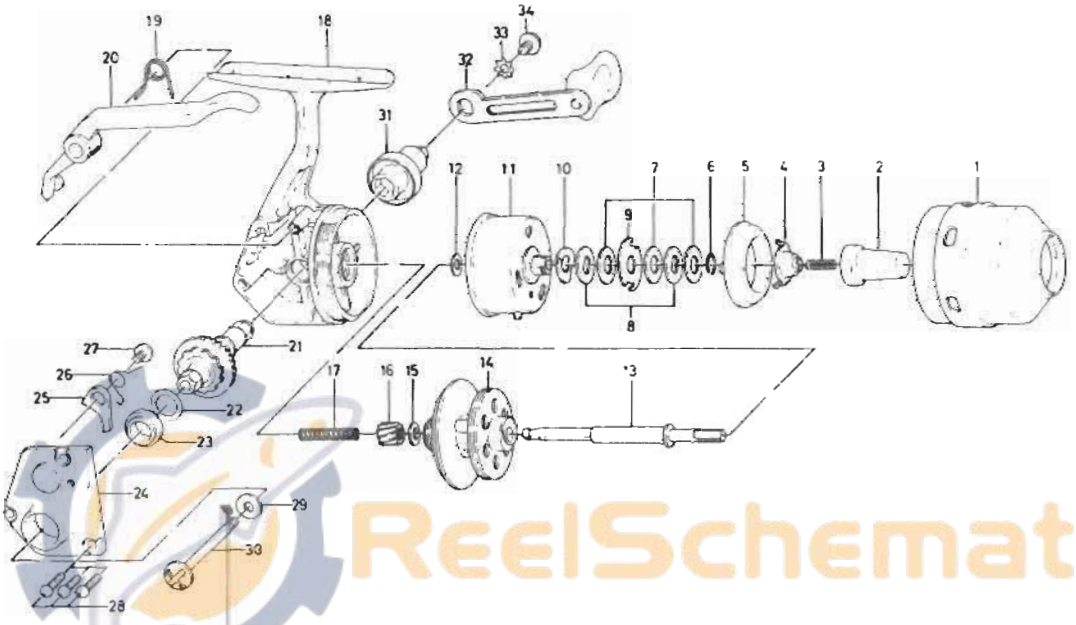

ReelSchematic

Key No.	Parts No.	Parts Name	Key No.	Parts No.	Parts Name
1	B45-6602	Front cover	18	B62-3401	Body
2	B62-4801	Drag knob	19	B62-3801	Casting trigger spring
3	145-1501	Drag spring	20	B62-3701	Casting trigger
4	376-1312	Drag adjusting plate	21	B62-4401	Drive gear
5	330-4601	Line stopper	22	373-0100	Drive gear adjusting washer
6	171-7801	Drag washer retainer	23	B43-7702	Bearing
7	376-1101	Drag washer A	24	B62-4501	Body cover
8	376-1001	Drag washer B	25	111-8501	Anti-reverse claw
9	376-1201	Drag washer C	26	144-5111	Anti-reverse claw spring
10	150-6801	Drag washer D	27	350-1931	Anti-reverse claw screw
11	736-7302	Rotor assembly	28	351-7801	Body cover screw
12	376-0901	Rotor washer	29	372-3501	Handle washer B
13	B62-4001	Main shaft	30	B62-4701	Handle screw B
14	800-1440	Spool	31	B62-4601	Gear shaft metal
15	373-4501	Pinion washer	32	746-0101	Handle
16	B62-4201	Pinion gear	33	160-8101	Handle washer A
17	B62-4301	Main shaft spring	34	353-8201	Handle screw A