Please order by parts number, not key number
*Veuillez indiquer le numéro de la pièce (Non "Key" No.*

Daiwa
COMMITTED TO TOTAL QUALITY
SPINCASTING REEL

# Underspin 80XD / 120XD

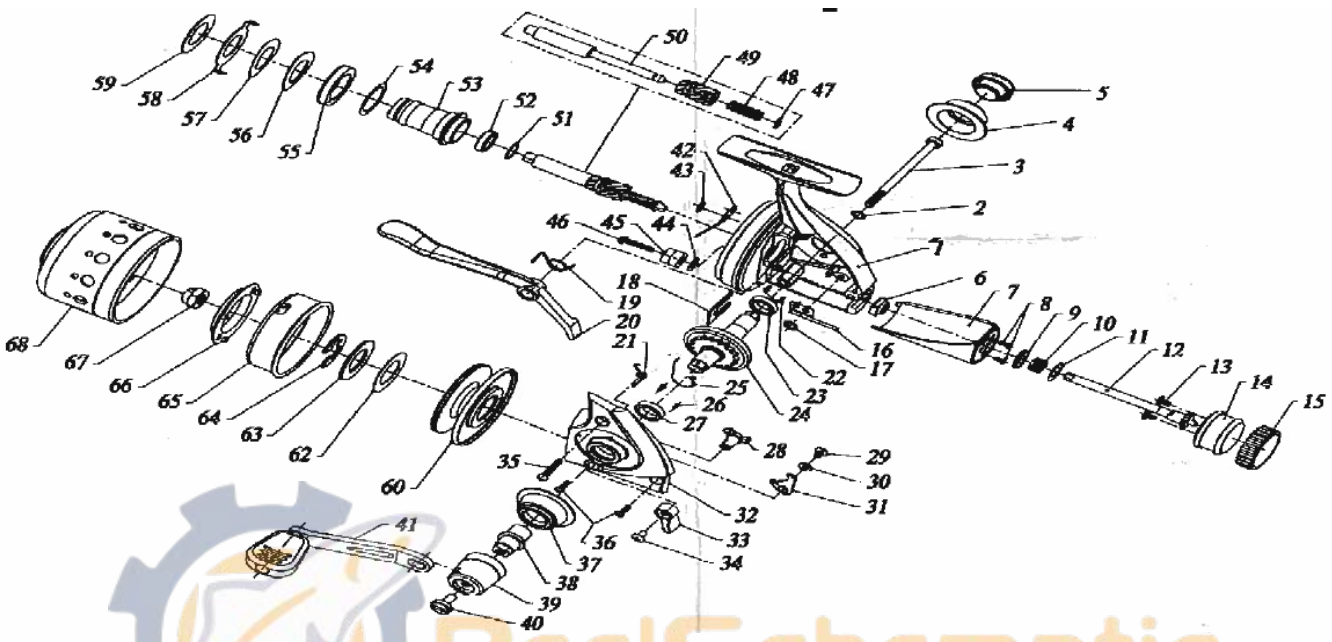

| Key No. | Parts No. | Parts Name |
|---|---|---|
| 1 | W32-5602 | Body |
| 2 | W31-7001 | Washer (A) |
| 3 | W31-7101 | Drive Shaft |
| 4 | W59-5201 | Side Ring |
| 5 | W59-5301 | Cap |
| 6 | W32-5701 | Collar |
| 7 | W32-5802 | Rear Cover |
| 8 | W32-5901 | Screw (A) |
| 9 | W32-6001 | Click Gear |
| 10 | W32-6101 | Drag Knob Spring |
| 11 | W32-6201 | Washer (B) |
| 12 | W32-6301 | Drag Shaft |
| 13 | W32-6401 | Screw (B) |
| 14 | W32-6502 | Drag Knob Assembly |
| 15 | W32-6602 | "0" Ring |
| 16 | W32-6701 | Click Spring (A) |
| 17 | W32-6801 | Retainer (A) |
| 18 | W32-6901 | Pinion Retainer |
| 19 | W32-7001 | Casting Trigger Spring |
| 20 | W32-7202 | Casting Trigger |
| 21 | W32-7301 | Anti-Reverse Cam Spring |
| 22 | W32-7401 | Screw (C) |
| 23 | W31-6001 | Bushing |
| 24 | W32-7501 | Drive Gear |
| 25 | W31-6501 | Anti-Reverse Pawl Spring |
| 26 | W31-5901 | Screw (D) |
| 27 | W31-6001 | Bushing |
| 28 | W32-7601 | Anti-Reverse Cam |
| 29 | W32-7701 | Screw (E) |
| 30 | W32-7801 | Washer (C) |
| 31 | W32-7901 | Anti-Reverse Pawl |
| 32 | W32-8102 | Side Cover |
| 33 | W31-5404 | Anti-Reverse Lever |
| 34 | W31-5301 | Screw (F) |
| 35 | W32-8201 | Screw (G) |
| 36 | W31-5201 | Screw (H) |
| 37 | W59-5401 | Side Ring |
| 38 | W32-0701 | Handle Metal |
| 39 | W59-5501 | Handle Stand |
| 40 | W32-0901 | Handle Screw |
| 41 | W59-5601 | Handle Assembly |
| 42 | W32-8301 | Click Spring (B) |
| 43 | W31-7901 | Retainer (B) |
| 44 | W32-8401 | Washer (D) |
| 45 | W32-8501 | Drag Gear |
| 46 | W32-8601 | Screw (I) |
| 47 | W31-8001 | Spring Retainer |
| 48 | W31-8101 | Main Shaft Spring |
| 49 | W32-8801 | Pinion Gear |
| 50 | W31-8301 | Main Shaft |
| 51 | W31-8501 | Washer (E) |
| 52 | W31-6011 | Ball Bearing |
| 53 | W32-9001 | Spool Metal |
| 54 | W31-8901 | Washer (F) |
| 55 | W32-9101 | Drag Plate |
| 56 | W31-8901 | Drag Spring Washer (A) |
| 57 | W31-8903 | Drag Spring Washer (B) |
| 58 | W31-9002 | Eared Washer |
| 59 | W31-9101 | Drag Washer |
| 60 | W59-5701 | Spool Assembly |
| 62 | W31-9101 | Drag Washer |
| 63 | W31-9501 | Key Washer |
| 64 | W31-9601 | Spool Retainer |
| 65 | W58-5801 | Rotor |
| 66 | W32-0101 | Line Stopper |
| 67 | W32-0301 | Rotor Nut |
| 68 | W59-5801 | Front Cover |

**Underspin 120XD SPECIAL PARTS**

| Key No. | Parts No. | Parts Name |
|---|---|---|
| 1 | W32-5502 | Body |
| 20 | W32-7102 | Casting Trigger |
| 32 | W32-8002 | Side Cover |
| 50 | W31-8401 | Main Shaft |
| 53 | W32-8901 | Spool Metal |
| 60 | W59-5901 | Spoof Assembly |
| 65 | W58-5901 | Rotor |
| 66 | W32-0201 | Line Stopper |
| 68 | W59-6001 | Front Cover |