www.reelschematic.com

Daiwa
NUMBER 1 IN THE WORLD • BY DESIGN

SPINNING REEL 2600C

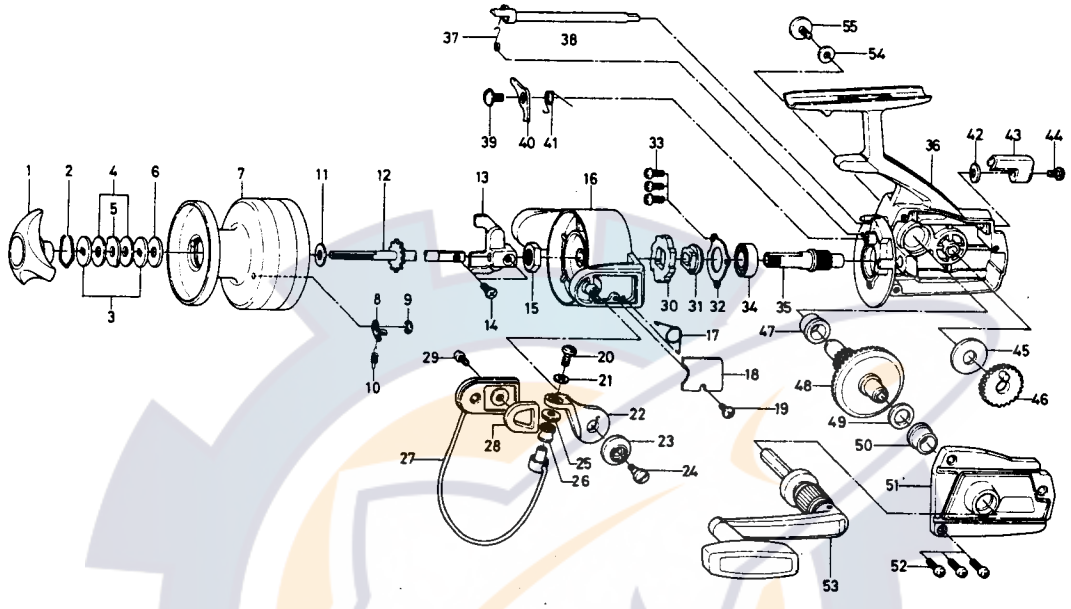

Key No.	Parts No.	Parts Name
1	6-740-2103	Drag knob
2	6-170-4001	Drag washer retainer
3	6-373-2502	Drag D washer
4	6-374-2901	Disc washer
5	6-375-5301	Drag A washer
6	6-370-6901	Drag washer A
7	6-734-1702	Spool
8	6-B07-8201	Spool click claw
9	6-320-1402	Spool click claw retainer
10	6-145-2101	Spool click claw spring
11	6-374-9002	Spool washer
12	6-710-9123	Main shaft
13	6-481-0901	Oscillating slider
14	6-351-8901	Oscillating slider screw
15	6-340-8301	Rotor nut
16	6-201-7707	Rotor
17	6-143-5311	Bail spring
18	6-632-6411	Bail spring cover
19	6-352-2501	Bail spring cover screw
20	6-363-3111	Bail screw
21	6-375-1101	Bail washer
22	6-231-1901	Arm lever
23	6-130-3201	Bail holder cap
24	6-363-1901	Arm lever screw
25	6-501-2001	Roller collar
26	6-250-4321	Line roller
27	6-725-7401	Bail
28	6-210-3111	Balancer

Sold as one unit
Spool assembly
6-734-1603

Key No.	Parts No.	Parts Name
29	6-351-6601	Bail holder screw
30	6-280-7001	Ratchet
31	6-636-6711	Click gear
32	6-635-9901	Ball bearing ret. washer
33	6-351-6601	Ball bearing ret. washer screw
34	6-635-4801	Ball bearing
35	6-402-7511	Pinion gear
36	6-701-0006	Body
37	6-144-0321	Anti-reverse cam spring
38	6-B15-6402	Anti-reverse cam
39	6-352-1102	Anti-reverse claw screw
40	6-111-5801	Anti-reverse claw
41	6-144-5601	Anti-reverse claw spring
42	6-373-2700	Anti-reverse lever washer
43	6-541-1901	Anti-reverse lever
44	6-352-2501	Anti-reverse lever screw
45	6-374-6600	Oscillating gear washer
46	6-412-3411	Oscillating gear
47	6-501-6201	Bearing metal
48	6-414-0701	Drive gear
49	6-371-2820	Drive gear washer
50	6-501-6201	Bearing metal
51	6-706-6006	Body cover
52	6-351-8501	Body cover screw
53	6-746-8832	Handle
54	6-371-9521	Handle washer
55	6-351-3631	Handle screw