www.reelschematic.com

Daiwa
ENGINEERED TACKLE

SPINNING REEL **7300HA**

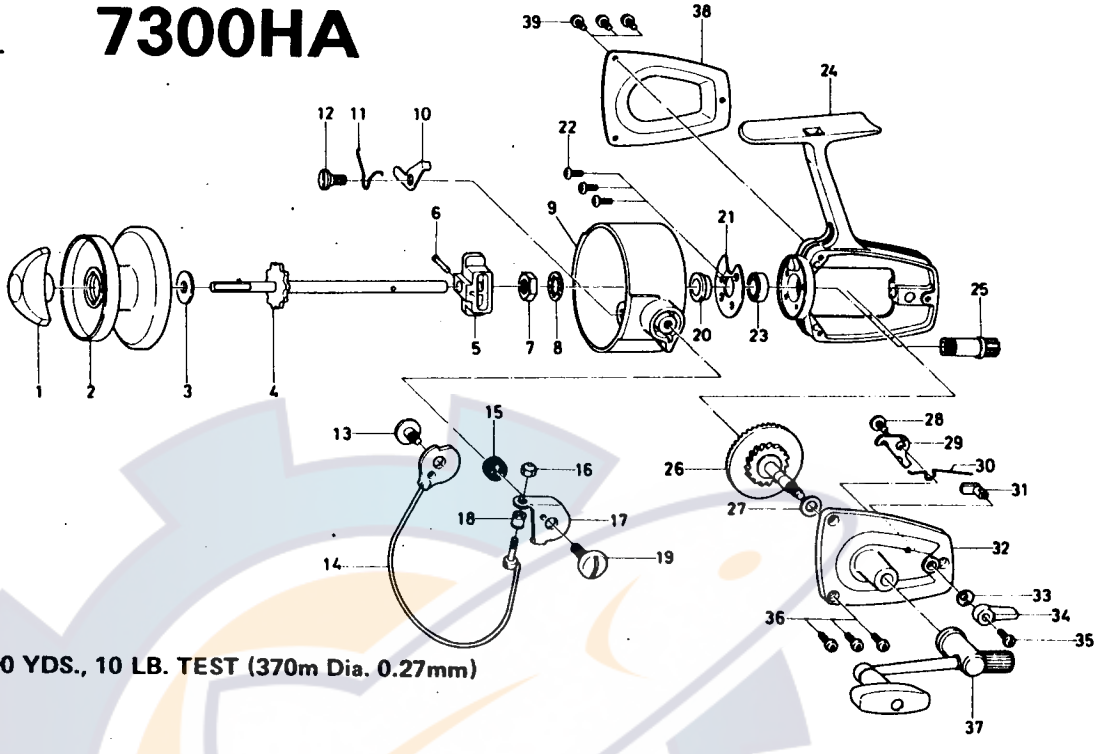

LINE CAPACITY: 300 YDS., 10 LB. TEST (370m Dia. 0.27mm)

Key No.	Parts No.	Parts Name
1	60034424	Drag knob
2	60034741	Spool assembly
3	63714411	Spool washer
4	60034511	Main shaft
5	64803511	Oscillating slider
6	64902421	Oscillating slider pin
7	63405842	Rotor nut
8	61601611	Rotor retaining washer
9	60058644	Rotor
10	65706611	Bail kick lever
11	61405031	Bail kick lever spring
12	63611511	Bail kick lever screw
13	63616501	Bail holder screw
14	60028831	Bail
15	61409221	Bail spring
16	63408201	Bail nut
17	62301651	Arm lever
18	62500231	Line roller
19	63616611	Arm lever screw
20	65003212	Pinion collar
21	61505631	Ball bearing retaining washer
22	63501931	Ball bearing retaining washer screw
23	66316901	Ball bearing
24	61923303	Body
25	64007021	Pinion
26	64109851	Drive gear
27	63700350	Drive gear washer
28	63512561	Anti-reverse claw screw
29	61103721	Anti-reverse claw
30	61414411	Anti-reverse claw spring
31	64602011	Anti-reverse cam
32	60625721	Body cover A
33	61501751	Anti-reverse lever washer
34	65402221	Anti-reverse lever
35	63501931	Anti-reverse lever screw
36	63511501	Body cover A screw
37	60006141	Handle
38	67055503	Body cover B
39	63511301	Body cover B screw