www.reelschematic.com

Daiwa
NUMBER 1 IN THE WORLD • BY DESIGN

SPINNING REEL 7300HA

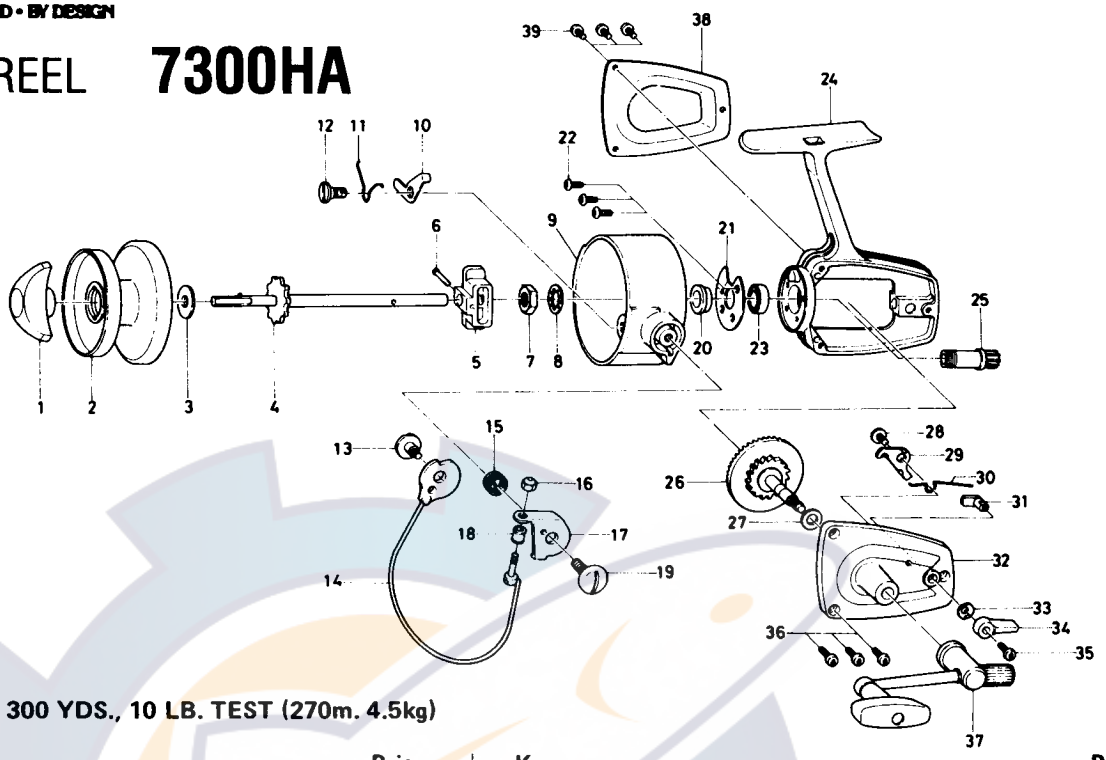

LINE CAPACITY: 300 YDS., 10 LB. TEST (270m. 4.5kg)

Key No.	Parts No.	Parts Name	Price Per Piece
1	6-003-4424	Drag knob	$1.90
2	6-003-4741	Spool assembly	3.60
3	6-371-4411	Spool washer	.10
4	6-003-4511	Main shaft	.90
5	6-480-3511	Oscillating slider	.35
6	6-4902421	Oscillating slider pin	.10
7	6-340-5842	Rotor nut	.25
8	6-160-1611	Rotor washer	.10
9	6-005-8644	Rotor	3.75
10	6-570-6611	Bail kick lever	.50
11	6-140-5031	Bail kick lever spring	.10
12	6-361-1511	Bail kick lever screw	.25
13	6-361-6501	Bail holder screw	.50
14	6-002-8831	Bail	2.10
15	6-140-9221	Bail spring	.15
16	6-340-8201	Bail nut	.50
17	6-230-1651	Arm lever	.45
18	6-250-0231	Line roller	.40
19	6-361-6611	Arm lever screw	.65
20	6-500-3212	Pinion collar	.25

Key No.	Parts No.	Parts Name	Price Per Piece
21	6-150-5631	Ball bearing retaining washer	$ .40
22	6-350-1931	Ball bearing retaining washer screw	.10
23	6-631-6901	Ball bearing	2.80
24	6-192-3303	Body	4.75
25	6-400-7021	Pinion	1.40
26	6-410-9851	Drive gear	1.40
27	6-370-0350	Drive gear washer	.10
28	6-351-2561	Anti-reverse claw screw	.15
29	6-110-3721	Anti-reverse claw	.45
30	6-141-4411	Anti-reverse claw spring	.10
31	6-460-2011	Anti-reverse cam	.25
32	6-062-5721	Body cover A	1.85
33	6-150-1751	Anti-reverse lever washer	.10
34	6-540-2221	Anti-reverse lever	.30
35	6-350-1931	Anti-reverse lever screw	.10
36	6-351-1501	Body cover A screw	.10
37	6-000-6141	Handle	3.15
38	6-705-5503	Body cover B	1.10
39	6-351-1301	Body cover B screw	.10