www.reelschematic.com

Daiwa
COMMITTED TO TOTAL QUALITY

SPINNING REEL
M10/M13

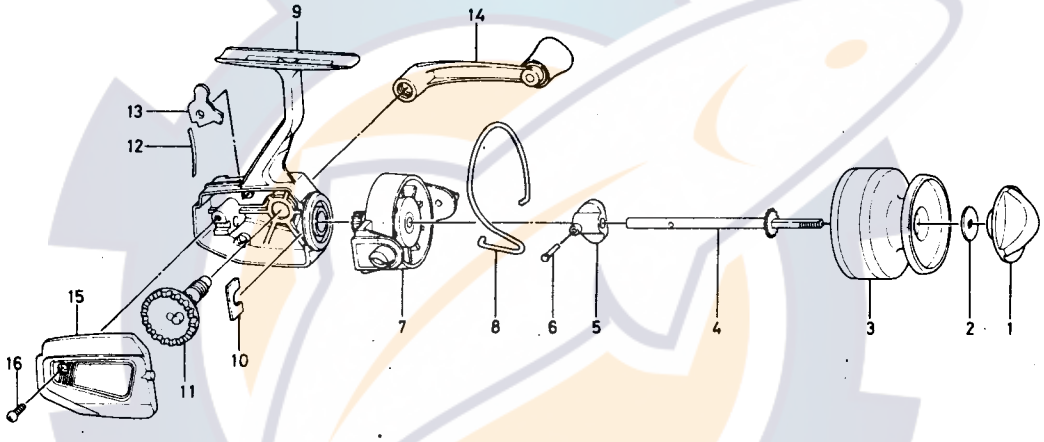

Key No.	Parts No.	Parts Name
1	441-3501	Drag knob
2	374-7901	Drag washer
3	B57-5301	Spool for M10
	* B57-7201	Spool for M13
4	B57-4801	Main shaft
5	480-5101	Oscillating slider
6	490-4411	Oscillating slider pin
7	B57-4501	Rotor for M10
	* B57-7001	Rotor for M13
8	B57-4701	Bail for M10
	* B57-7101	Bail for M13

Key No.	Parts No.	Parts Name
9	B57-4302	Body
10	632-4011	Pinion retainer
11	412-8901	Drive gear
12	150-6201	Anti-reverse claw spring
13	111-6101	Anti-reverse claw
14	745-7501	Handle
15	B63-4401	Body cover for M10
	* B63-4402	Body cover for M13
16	351-1103	Body cover screw

*Parts for M13 only.