www.reelschematic.com

Daiwa
COMMITTED TO TOTAL QUALITY

SPINNING REEL RB1300/1600

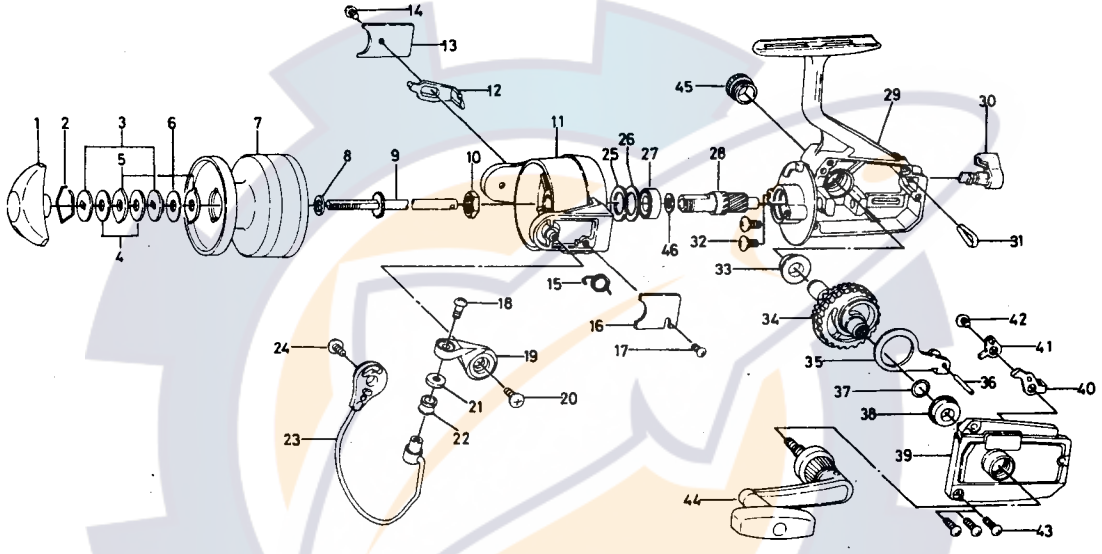

Key No.	Parts No.	Parts Name
1	B68-3401	Drag knob
2	170-4001	Drag washer retainer
3	373-2502	Drag D washer
4	374-2901	Disc washer
5	375-5301	Drag A washer
6	370-6901	Drag washer A
7	B68-3101	Spool
8	371-8331	Spool washer
9	B71-5701	Main shaft
10	B68-1701	Rotor nut
11	B68-1001	Rotor
12	B45-1001	Bail kick lever
13	B68-1301	Bail kick lever cover
14	352-0402	Bail kick lever cover screw
15	B18-7702	Bail spring
16	B68-1201	Bail spring cover
17	352-0402	Bail spring cover screw
18	B67-9301	Bail screw
19	B68-1101	Arm lever
20	351-6102	Arm lever screw
21	B68-5701	Roller collar
22	250-3921	Line roller
23	B68-1401	Bail
24	351-6102	Bail holder screw
25	B47-9201	Rotor washer A
26	B68-0901	Rotor washer B
27	B55-3401	Ball bearing
28	B68-0801	Pinion gear

Sold as one unit
Spool assembly
6-B68-2701

Key No.	Parts No.	Parts Name
29	B68-0301	Body
30	B66-2301	Anti-reverse lever
31	B68-0701	Anti-reverse lever spring
32	B51-5301	Ball bearing screw
33	B07-3303	Bearing
34	B68-1801	Drive gear
35	B11-6701	Oscillating slider
36	121-1211	Oscillating slider pin
37	371-2800	Drive gear washer
38	B07-3303	Bearing
39	B68-2001	Body cover
40	B68-2301	Anti-reverse claw
41	B50-1201	Anti-reverse claw plate
42	351-6102	Anti-reverse claw screw
43	351-8504	Body cover screw
44	B68-2401	Handle
45	B68-2601	Handle screw cap
46	B55-5001	Pinion washer

RB1600 Special Parts

1	B68-7301	Drag knob
7	B68-7101	Spool
11	B68-6701	Rotor
12	B45-7401	Bail kick lever
23	B68-6801	Bail
29	B68-0302	Body
39	B68-2002	Body cover
2–7	368-7001	Spool assembly